PRESIDENT

HENRY classic
ASC
12/24

Downloaded from www.cbradio.nl

SERVICE MANUAL

-TECNNICAL CHARACTERITICS

HENRY classic ASC 12/24 (config: EU PL d EC U In)

1-GENERAL:

-Multiconfiguration (EU, PL, d, EC, U, In)
-EU ⇒ 40 channels AM/FM 4W (from 26,965Mhz to 27,405Mhz)
-PL ⇒ 40 channels AM/FM 4W (from 26,960Mhz to 27,400Mhz)
-d ⇒ 80 channels FM 4W (from 26,565Mhz to 27,405Mhz)
40 channels AM 4W (from 26,965Mhz to 27,405Mhz)
-EC ⇒ 40 channels FM 4W (from 26,965Mhz to 27,405Mhz)
-U ⇒ 40 channels CEPT AM/FM 4W (from 26,965Mhz to 27,405Mhz)
40 channels FM UK 4W (from 27,60125Mhz to 27,99125Mhz)
-In ⇒ 27 channels AM/FM 4W (from 26,965Mhz to 27,275Mhz)
-Channel step
-10KHz
-Class of emission
-AM(A3E)/FM(F3E)
-Power supply
-12V/24V/ From10,8V to 31,2V
-Antenna impedance
-50Ω
-Dimensions(in mm)
-115(W)x180(D)x35(H)
-Weight
-0,8Kg

2-TRANSMISSION:

-Frequency allowance
-±300Hz
-Transmission interference
-Inferior to 4nW(-54dBm)
-Audio frequency response
-From 300Hz to 3kHz in AM/FM
-Emitted power in the adjacent channel
-Inferior to 20µW
-Microphone sensitivity
-Inferior to 10mV
-Current drain
-1,7A(in transmission mode with modulation)
-Modulated signal distortion
-Inferior to 2%

3-RECEPTION:

-Maximum sensitivity at 20dB sinad

-0,5µV(-113dBm) AM/FM

-Audio frequency response

-From 300Hz to 3kHz in AM/FM

-Adjacent channel selectivity

-Superior to 60dB

-Frequency image rejection

-Superior to 60dB

-Intermodulation response

-Superior to 54dB

-Maximum audio power

-2W

-Squelch sensitivity

-Threshold 0,2µV(-120dBm)/Tight 1mV(-47dBm)

-Current drain

-500mA nominal/800mA maximum

ALIGNMENT PROCEDURE
(HENRY classic ASC 12/24V)

* VCO/PLL PORTION

- Alignment procedure
- Test points
- Frequencies chart

* TRANSMITTER

- Alignment procedure
- Test points

* RECEIVER

- Alignment procedure
- Test points

Test equipement required

Frequency counter 200 Mhz	HF Generator
DC Volmeter	BF Volmeter
Distortiometer	HF Volmeter
Wattmeter - Dummy load	Osilloscope
FM linear detector	Load 8 Ω
AF generator	Sinad meter

Conditions of Measurements on HF Generator

Reception
AM mode: Level - 107 dBm Frequency 1 KHz with 60% of modulation.
FM mode: Level - 107 dBm Frequency 1 KHz with 1,2KHz of deviation.

Transmission
Frequency1 KHz 30mV.

ALIGNMENT VCO/PLL

1 - Alignment procedure (13,2V/26,4V;configuration”EU”)

STEP	CONDITION	ADJUSTMENT	REMARKS OF ADJUSTMENT
1	FM(UK Eng) RX mode Channel 20	RT301	Connect a frequency counter to TP200, and adjust RT301 to reach 38,48625MHz.
2	AM/FM(EU) RX mode Channel 20	RT302	Connect a frequency counter to TP200, and adjust RT302 to reach 37,900MHz.
3	AM/FM(EU) TX/RX mode Channel 40		Connect a voltmeter to TP 302, and check: Tx Channel 40=2,7V±0,2V Rx Channel 40=2,6V±0,2V
4	AM/FM(EU) TX/RX mode Channel 1		Connect a voltmeter to TP 302, and check: Tx Channel 1=2,5V±0,2V Rx Channel 1=2,4V±0,2V
5	AM/FM(EU) TX/RX mode Channel 1 to 40 or 1 to 80(d)		Connect a frequency counter to TP200, and check frequencies.

ALIGNMENT VCO/PLL

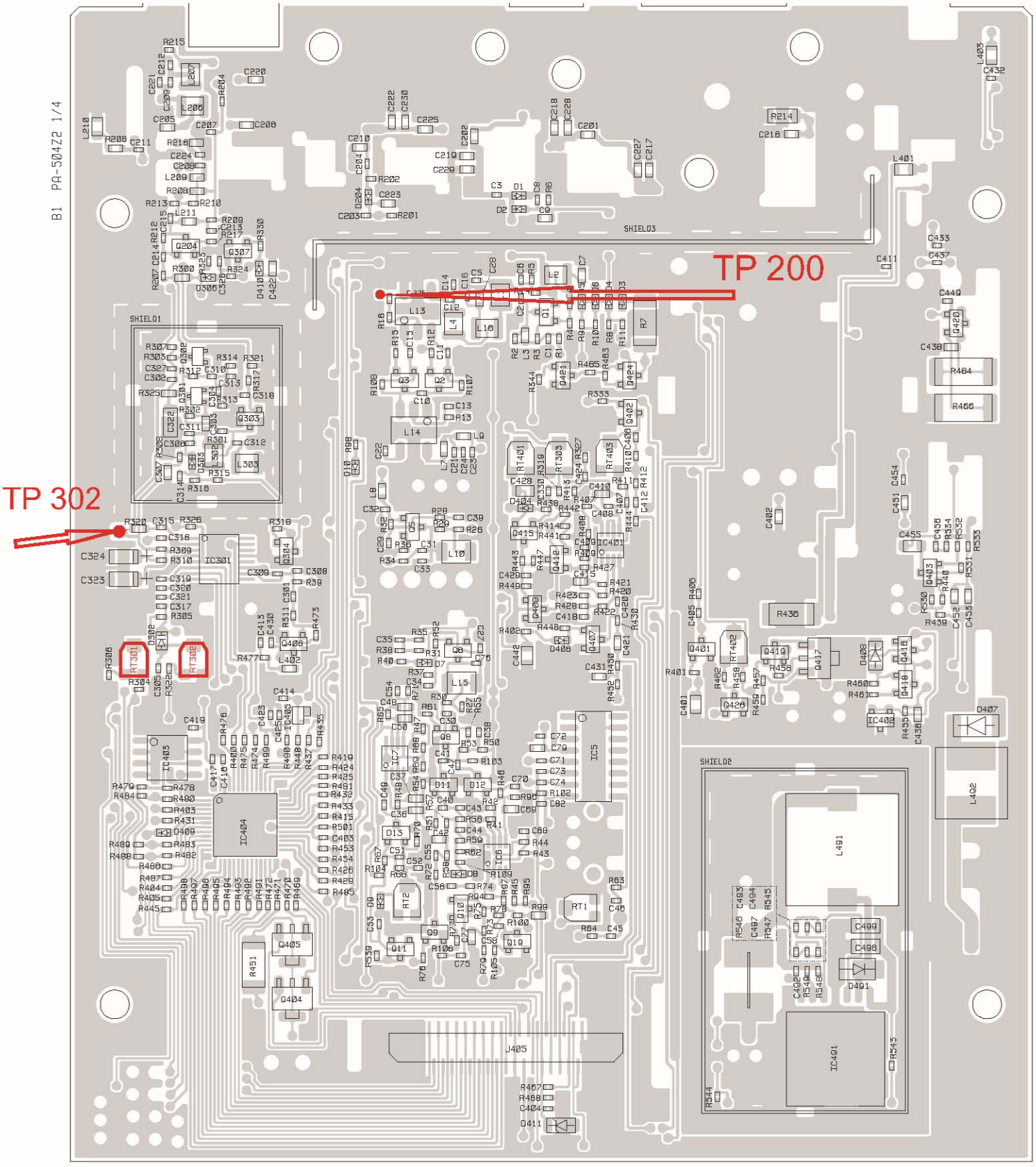

- FREQUENCY LIST (EU channels)

CH	Channels Frequencies (MHz)	VCO Frequencies (MHz)
1	26,965	37,660
2	26,975	37,670
3	26,985	37,680
4	27,005	37,700
5	27,015	37,710
6	27,025	37,720
7	27,035	37,730
8	27,055	37,750
9	27,065	37,760
10	27,075	37,770
11	27,085	37,780
12	27,105	37,800
13	27,115	37,810
14	27,125	37,820
15	27,135	37,830
16	27,155	37,850
17	27,165	37,860
18	27,175	37,870
19	27,185	37,880
20	27,205	37,900
21	27,215	37,910
22	27,225	37,930
23	27,255	37,950
24	27,235	37,930
25	27,245	37,940
26	27,265	37,960
27	27,275	37,970
28	27,285	37,980
29	27,295	37,990
30	27,305	38,000
31	27,315	38,010
32	27,325	38,020
33	27,335	38,030
34	27,345	38,040
35	27,355	38,050
36	27,365	38,060
37	27,375	38,070
38	27,385	38,080
39	27,395	38,090
40	27,405	38,100

- FREQUENCY LIST (PL channels)

CH	Channels Frequencies (MHz)	VCO Frequencies (MHz)
1	26,960	37,655
2	26,970	37,665
3	26,980	37,675
4	27,000	37,695
5	27,010	37,705
6	27,020	37,715
7	27,030	37,725
8	27,050	37,745
9	27,060	37,755
10	27,070	37,765
11	27,080	37,775
12	27,100	37,795
13	27,110	37,805
14	27,120	37,815
15	27,130	37,825
16	27,150	37,845
17	27,160	37,855
18	27,170	37,865
19	27,180	37,875
20	27,200	37,895
21	27,210	37,905
22	27,220	37,915
23	27,250	37,945
24	27,230	37,925
25	27,240	37,935
26	27,260	37,955
27	27,270	37,965
28	27,280	37,975
29	27,290	37,985
30	27,300	37,995
31	27,310	38,005
32	27,320	38,015
33	27,330	38,025
34	27,340	38,035
35	27,350	38,045
36	27,360	38,055
37	27,370	38,065
38	27,380	38,075
39	27,390	38,085
40	27,400	38,095

- FREQUENCY LIST (d channels)

CH D	Channels Frequencies (MHz)	VCO Frequencies (MHz)	CH D	Channels Frequencies (MHz)	VCO Frequencies (MHz)
1	26,965	37,660	41	26,565	37,260
2	26,975	37,670	42	26,575	37,270
3	26,985	37,680	43	26,585	37,280
4	27,005	37,70	44	26,595	37,290
5	27,015	37,710	45	26,605	37,300
6	27,025	37,720	46	26,615	37,310
7	27,035	37,730	47	26,625	37,320
8	27,055	37,750	48	26,635	37,330
9	27,065	37,760	49	26,645	37,340
10	27,075	37,770	50	26,655	37,350
11	27,085	37,780	51	26,665	37,360
12	27,105	37,800	52	26,675	37,370
13	27,115	37,810	53	26,685	37,380
14	27,125	37,820	54	26,695	37,390
15	27,135	37,830	55	26,705	37,400
16	27,155	37,850	56	26,715	37,410
17	27,165	37,860	57	26,725	37,420
18	27,175	37,870	58	26,735	37,430
19	27,185	37,880	59	26,745	37,440
20	27,205	37,900	60	26,755	37,450
21	27,215	37,910	61	26,765	37,460
22	27,225	37,930	62	26,775	37,470
23	27,255	37,950	63	26,785	37,480
24	27,235	37,930	64	26,795	37,490
25	27,245	37,940	65	26,805	37,500
26	27,265	37,960	66	26,815	37,510
27	27,275	37,970	67	26,825	37,520
28	27,285	37,980	68	26,835	37,530
29	27,295	37,990	69	26,845	37,540
30	27,305	38,000	70	26,855	37,550
31	27,315	38,010	71	26,865	37,560
32	27,325	38,020	72	26,875	37,570
33	27,335	38,030	73	26,885	37,580
34	27,345	38,040	74	26,895	37,590
35	27,355	38,050	75	26,905	37,600
36	27,365	38,060	76	26,915	37,610
37	27,375	38,070	77	26,925	37,620
38	27,385	38,080	78	26,935	37,630
39	27,395	38,090	79	26,945	37,640
40	27,405	38,100	80	26,955	37,650

- FREQUENCY LIST (EC channels)

CH CEPT	Channels Frequencies (MHz)	VCO Frequencies (MHz)
1	26,965	37,660
2	26,975	37,670
3	26,985	37,680
4	27,005	37,700
5	27,015	37,710
6	27,025	37,720
7	27,035	37,730
8	27,055	37,750
9	27,065	37,760
10	27,075	37,770
11	27,085	37,780
12	27,105	37,800
13	27,115	37,810
14	27,125	37,820
15	27,135	37,830
16	27,155	37,850
17	27,165	37,860
18	27,175	37,870
19	27,185	37,880
20	27,205	37,900
21	27,215	37,910
22	27,225	37,930
23	27,255	37,950
24	27,235	37,930
25	27,245	37,940
26	27,265	37,960
27	27,275	37,970
28	27,285	37,980
29	27,295	37,990
30	27,305	38,000
31	27,315	38,010
32	27,325	38,020
33	27,335	38,030
34	27,345	38,040
35	27,355	38,050
36	27,365	38,060
37	27,375	38,070
38	27,385	38,080
39	27,395	38,090
40	27,405	38,100

- FREQUENCY LIST (UK channels)

CH UK	Channels Frequencies (MHz)	VCO Frequencies (MHz)
1	27,60125	38,29625
2	27,61125	38,30625
3	27,62125	38,31625
4	27,63125	38,32625
5	27,64125	38,33625
6	27,65125	38,34625
7	27,66125	38,35625
8	27,67125	38,36625
9	27,68125	38,37625
10	27,69125	38,38625
11	27,70125	38,39625
12	27,71125	38,40625
13	27,72125	38,41625
14	27,73125	38,42625
15	27,74125	38,43625
16	27,75125	38,44625
17	27,76125	38,45625
18	27,77125	38,46625
19	27,78125	38,47625
20	27,79125	38,48625
21	27,80125	38,49625
22	27,81125	38,50625
23	27,82125	38,51625
24	27,83125	38,52625
25	27,84125	38,53625
26	27,85125	38,54625
27	27,86125	38,55625
28	27,87125	38,56625
29	27,88125	38,57625
30	27,89125	38,58625
31	27,90125	38,59625
32	27,91125	38,60625
33	27,92125	38,61625
34	27,93125	38,62625
35	27,94125	38,63625
36	27,95125	38,64625
37	27,96125	38,65625
38	27,97125	38,66625
39	27,98125	38,67625
40	27,99125	38,68625

- FREQUENCY LIST (In channels)

CH In	Channels Frequencies (MHz)	VCO Frequencies (MHz)
1	26,965	37,660
2	26,975	37,670
3	26,985	37,680
4	27,005	37,70
5	27,015	37,710
6	27,025	37,720
7	27,035	37,730
8	27,055	37,750
9	27,065	37,760
10	27,075	37,770
11	27,085	37,780
12	27,105	37,800
13	27,115	37,810
14	27,125	37,820
15	27,135	37,830
16	27,155	37,850
17	27,165	37,860
18	27,175	37,870
19	27,185	37,880
20	27,205	37,900
21	27,215	37,910
22	27,225	37,930
23	27,255	37,950
24	27,235	37,930
25	27,245	37,940
26	27,265	37,960
27	27,275	37,970

ALIGNMENT TRANSMITTER

1 - Alignment procedure (13,2V/26,4V;configuration”EU”)

STEP	CONDITION	ADJUSTMENT	REMARKS OF ADJUSTMENT
1	AM/FM(EU)TX Channel 20	RT402	Connect a wattmeter to jack antenna, adjust RT402 to reach 4W on the wattmeter.
2	Same as 1		Connect a dummy load to jack antenna. Check that the “RF meter” displays S9
3	FM(EU)TX Mod 30 mV 1 KHz CH 20	RT303	Adjust RT303 to reach ± 1,2KHz of deviation.
7	AM(EU)TX Mod 30 mV 1 KHz CH 20	RT401/RT403	First: Adjust RT401 and RT403 to the maximum of modulation, then adjust RT403 to reach ±90% of modulation, then adjust RT401 to reach ± 85% of modulation.

ALIGNMENT TRANSMITTER

B1 PA-5042 1/4

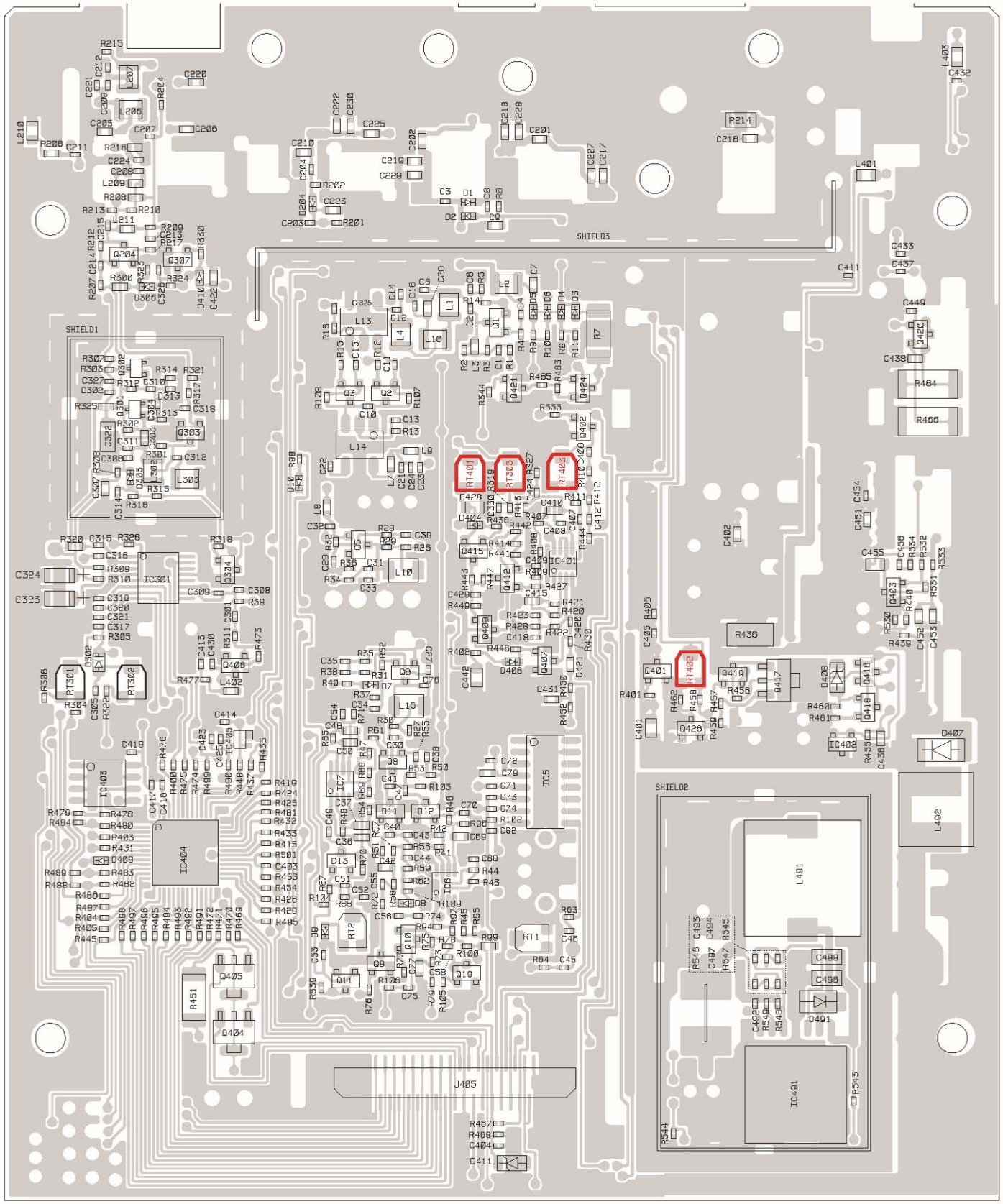

ALIGNMENT RECEIVER

1 - Alignment procedure (13,2V/26,4V;configuration"EU")

STEP	CONDITION	ADJUSTMENT	REMARKS OF ADJUSTMENT
1	AM(EU) Channel 20 Middle volume level. No squelch active		Connect HF generator to jack antenna adjusted at (–107dBm 1KHz 60%), connect sinad meter to jack EXT speaker and check that the sensitivity (≥ 20dB sinad).
2	FM(EU) Channel 20 Middle volume level No squelch active	L 12	Connect HF generator to jack antenna adjusted at (–107dBm 1KHz 1,2KHz Dev), connect sinad meter to jack EXT speaker and adjust L12 for maximum sensitivity(≥ 20dB sinad).
3	AM(EU) Channel 20 Middle volume level No squelch active		Connect HF generator to jack antenna adjusted at (–67dBm 1KHz 60%) and check that the "S meter" displays S9.
4	AM(EU) Channel 20 Middle volume level Squelch maximum clockwise	RT1(SQ)	Connect HF generator to jack antenna adjusted at (–47dBm 1KHz 60%) and adjust RT1 so that the signal is audible .
5	AM(EU) Channel 20 Middle volume level Squelch maximum counterclockwise (ASC)	RT2	Connect HF generator to jack antenna. Connect sinad meter to jack EXT speaker, adjust the ouput level of HF generator and adjust RT2 so that the opening ASC sinad is 20dB±2dB.

ALIGNMENT RECEIVER

B1 PQ-5042 1/4

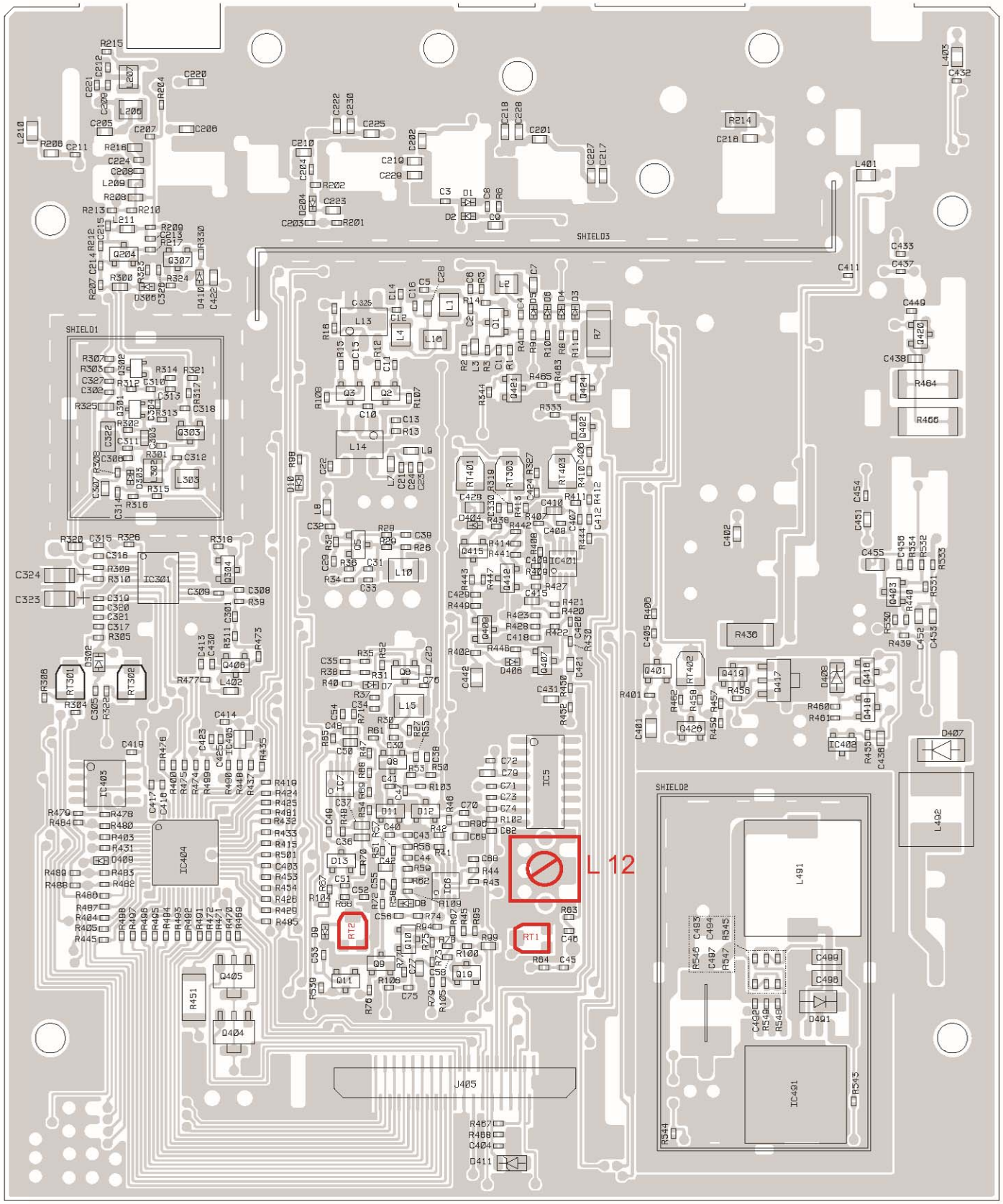

HENRY classic
ASC
12/24

BLOC DIAGRAM

BLOCK DIAGRAM
HENRYCLASSIC 12/24V(UT405ZV)

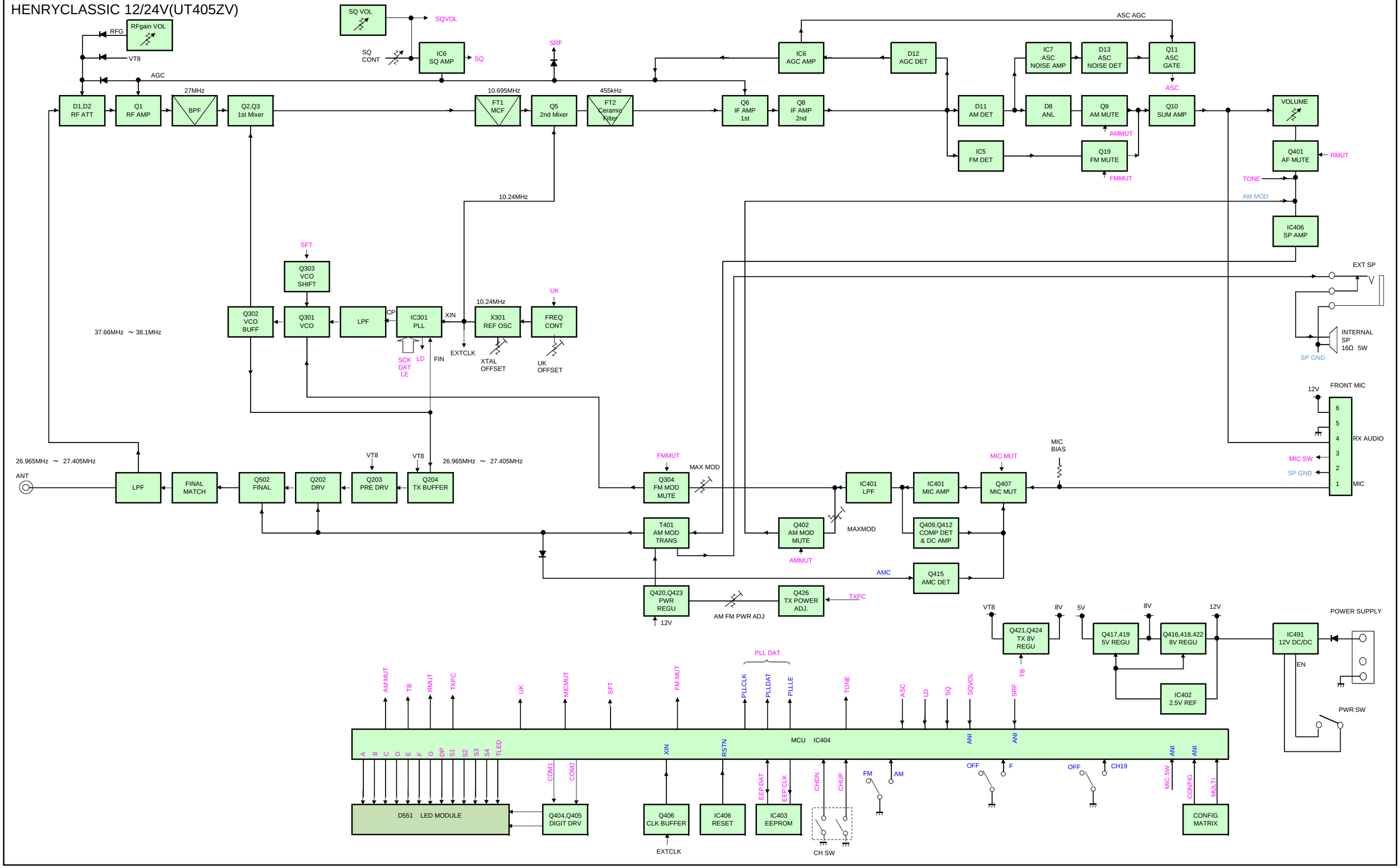

HENRY classic
ASC
12/24

SCHEMATIC DIAGRAM

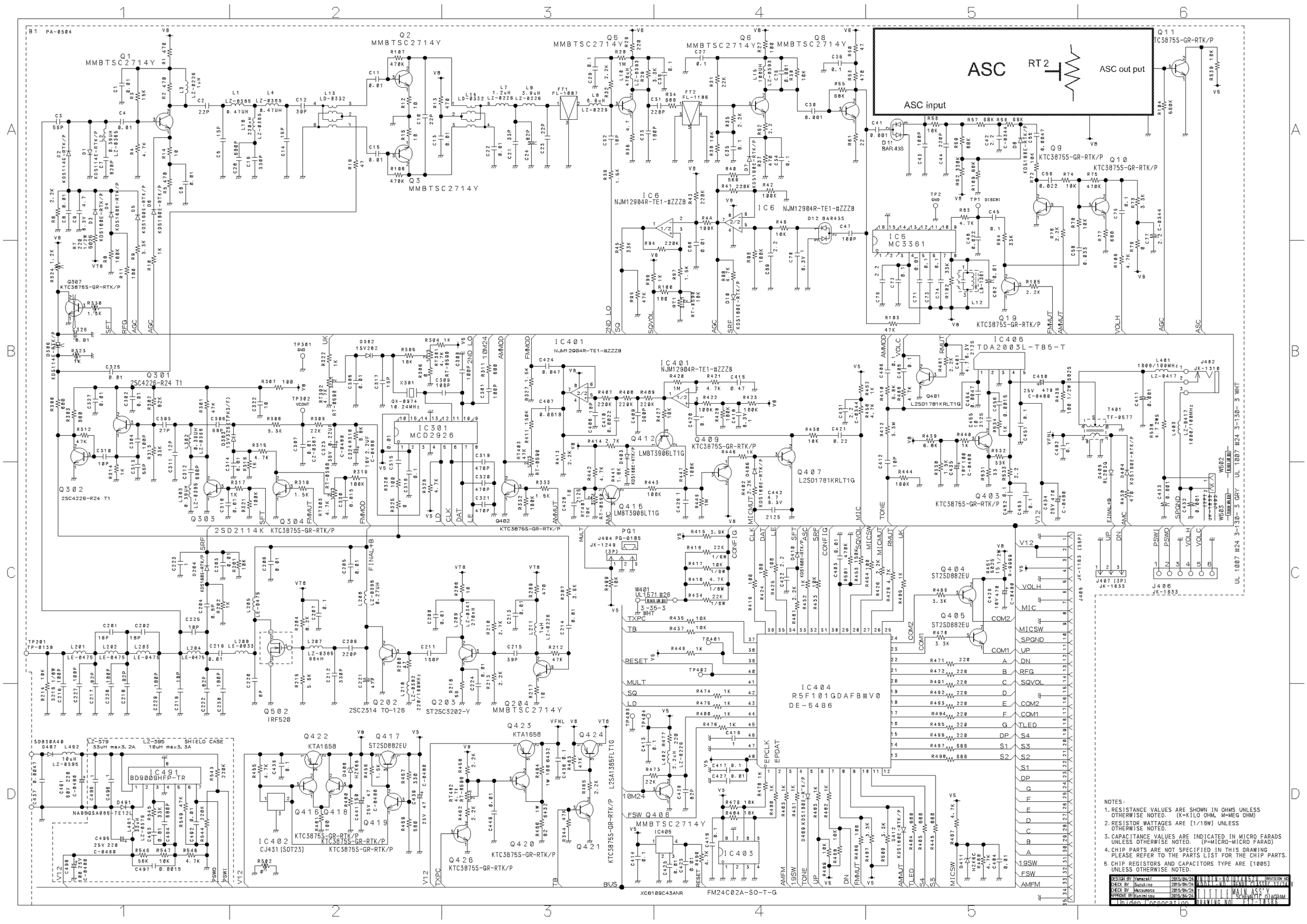

NOTES:

1. RESISTANCE VALUES ARE SHOWN IN OHMS UNLESS OTHERWISE NOTED. (K=KILO OHM, M=MEG OHM)
2. RESISTOR WATTAGES ARE [1/16W] UNLESS OTHERWISE NOTED.
3. CAPACITANCE VALUES ARE INDICATED IN MICRO FARADS UNLESS OTHERWISE NOTED. (P=MICRO-MICRO FARAD)
4. CHIP PARTS ARE NOT SPECIFIED IN THIS DRAWING PLEASE REFER TO THE PARTS LIST FOR THE CHIP PARTS.
5. CHIP REGISTORS AND CAPACITORS TYPE ARE [1005] UNLESS OTHERWISE NOTED.

DESIGN BY	Yamazaki	2015/04/24	UNIDEN-NO 11485Y REVISION NO
CHECK BY	Suzukino	2015/04/24	MODEL-NO HENRY CLASSIC 12/24
CHECK BY	Matsumoto	2015/04/24	TITTLE MAIN ASS'Y SCHEMATIC DIAGRAM
APPROVE BY	Kunimitsu	2015/04/24	DRAWING NO F12-10386

Uniden Corporation

HENRY classic
ASC
12/24

COMPONENT LAYOUT

B551 PA-504Z2 2/4

Use Pb free Solder

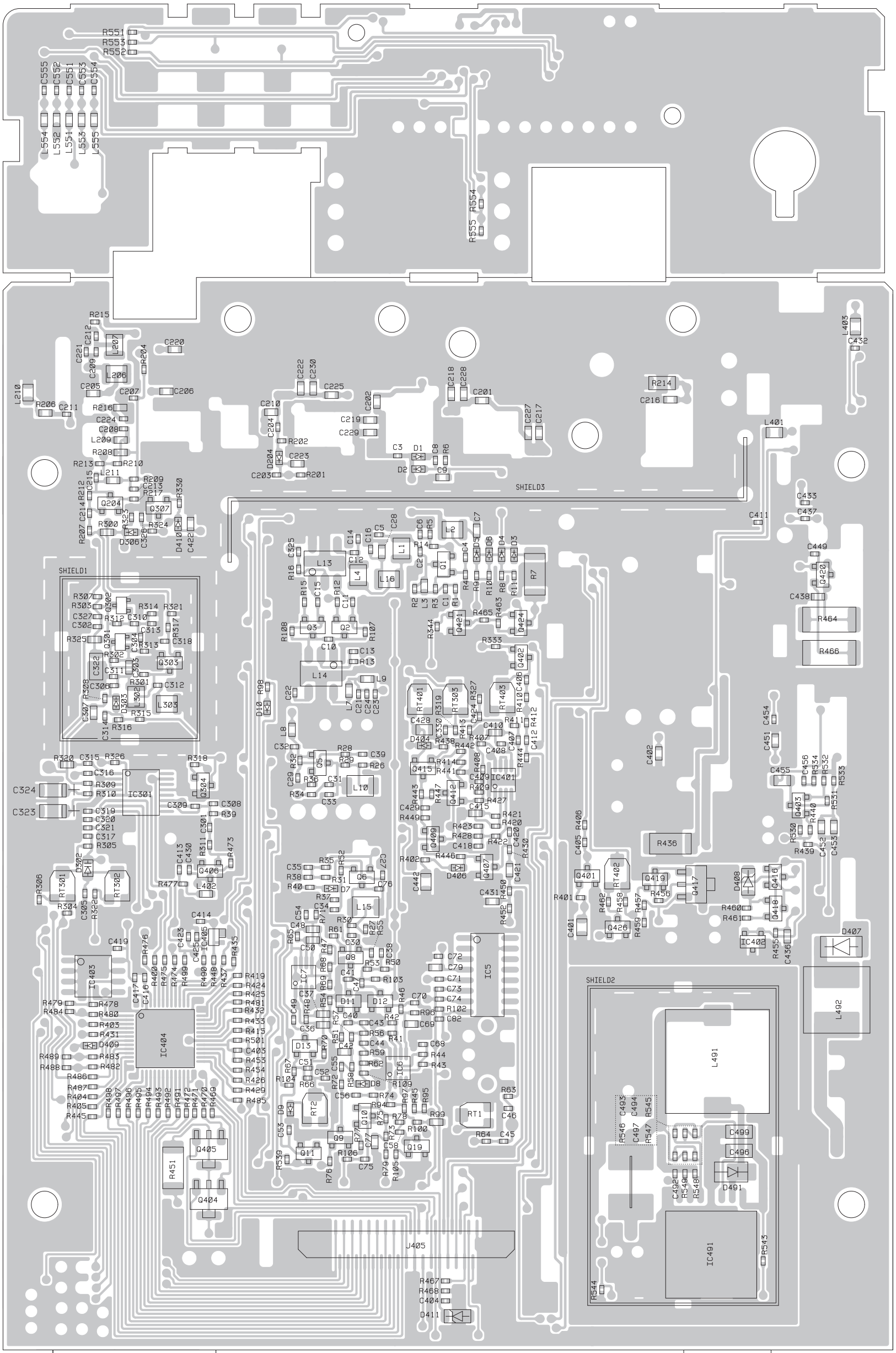

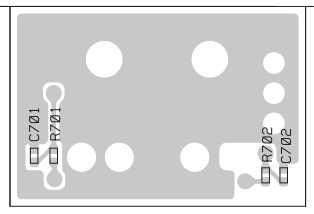

B701 PA-504Z2 3/4

B801 PA-504Z2 4/4

B1 PA-504Z2 1/4

NOTES:

1. RESISTANCE VALUES ARE SHOWN IN OHMS UNLESS OTHERWISE NOTED. (K=KILO OHM. M=MEG OHM)
2. RESISTOR WATTAGES ARE 1/6W UNLESS OTHERWISE NOTED.
3. CAPACITANCE VALUES ARE INDICATED IN MICRO FARADS UNLESS OTHERWISE NOTED. (P=MICRO-MICRO FARAD)
4. ALL CAPACITORS TEMPERATURE CHARACTERISTICS ARE ZF UNLESS OTHERWISE NOTED.
5. ALL CAPACITORS TEMPERATURE CHARACTERISTICS ARE SL (LESS THAN 1000PF) OR ZF (MORE THAN 1000PF) UNLESS OTHERWISE NOTED.

DESIGN. BY	DRAWN. BY	UNIDEN NO.	MODEL NO.
Yamazaki	Yamazaki	UT405ZV	HENRY CLASSIC 12/24V
Feb. 9. 2015	Feb. 9. 2015	TITLE	
CHECK. BY	APPRO. BY	CHIP LAYOUT TOP VIEW 1/3	
		DRAWING NO.	
REV. NO.		UNIDEN CORP.	

Use Pb free Solder

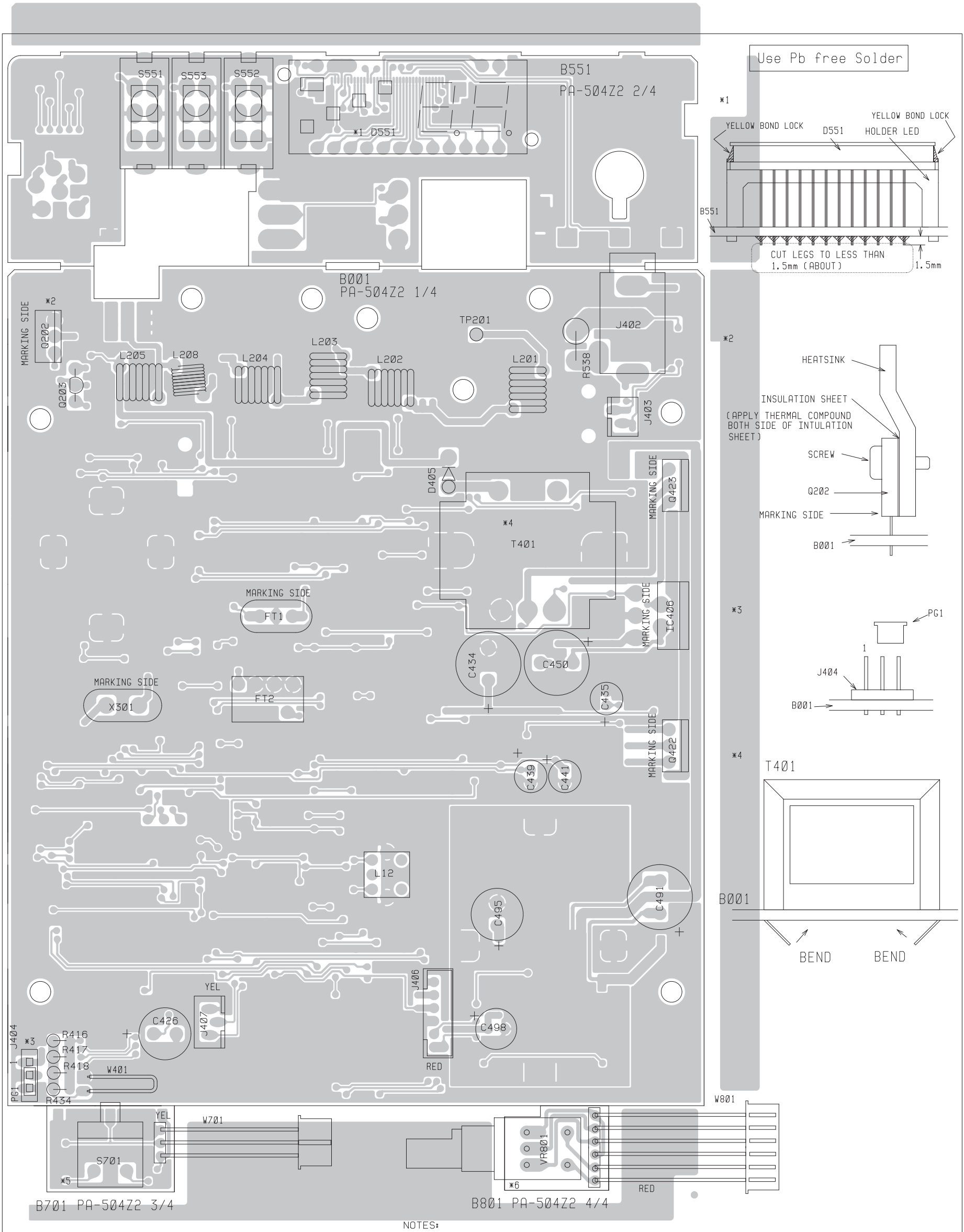

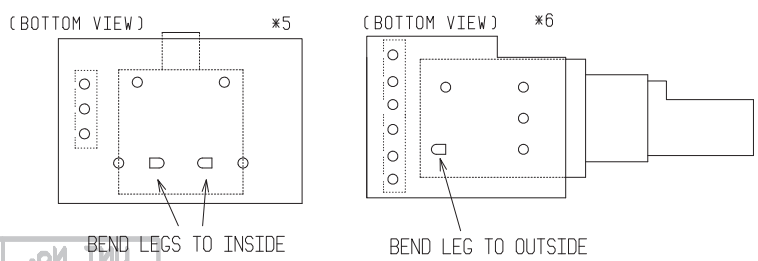

NOTES:

1. RESISTANCE VALUES ARE SHOWN IN OHMS UNLESS OTHERWISE NOTED. (K=KILO OHM. M=MEG OHM)
2. RESISTOR WATTAGES ARE 1/6W UNLESS OTHERWISE NOTED.
3. CAPACITANCE VALUES ARE INDICATED IN MICRO FARADS UNLESS OTHERWISE NOTED. (P=MICRO-MICRO FARAD)
4. ALL CAPACITORS TEMPERATURE CHARACTERISTICS ARE ZF UNLESS OTHERWISE NOTED.
5. ALL CAPACITORS TEMPERATURE CHARACTERISTICS ARE SL (LESS THAN 1000PF) OR ZF (MORE THAN 1000PF) UNLESS OTHERWISE NOTED.

DESIGN. BY	DRAWN. BY	UNIDEN NO.	MODEL NO.
Yamazaki	Yamazaki	UT405ZV	HENRY CLASSIC 12/24V
Feb. 9. 2015	Feb. 9. 2015	TITLE	
CHECK. BY	APPRO. BY	PARTS ASS'Y TOP VIEW 1/2	
		DRAWING NO.	
REV. NO.		UNIDEN CORP.	

UNI No.	
PCB No.	
ASSY	
BOTTOM PATTERN	FILM

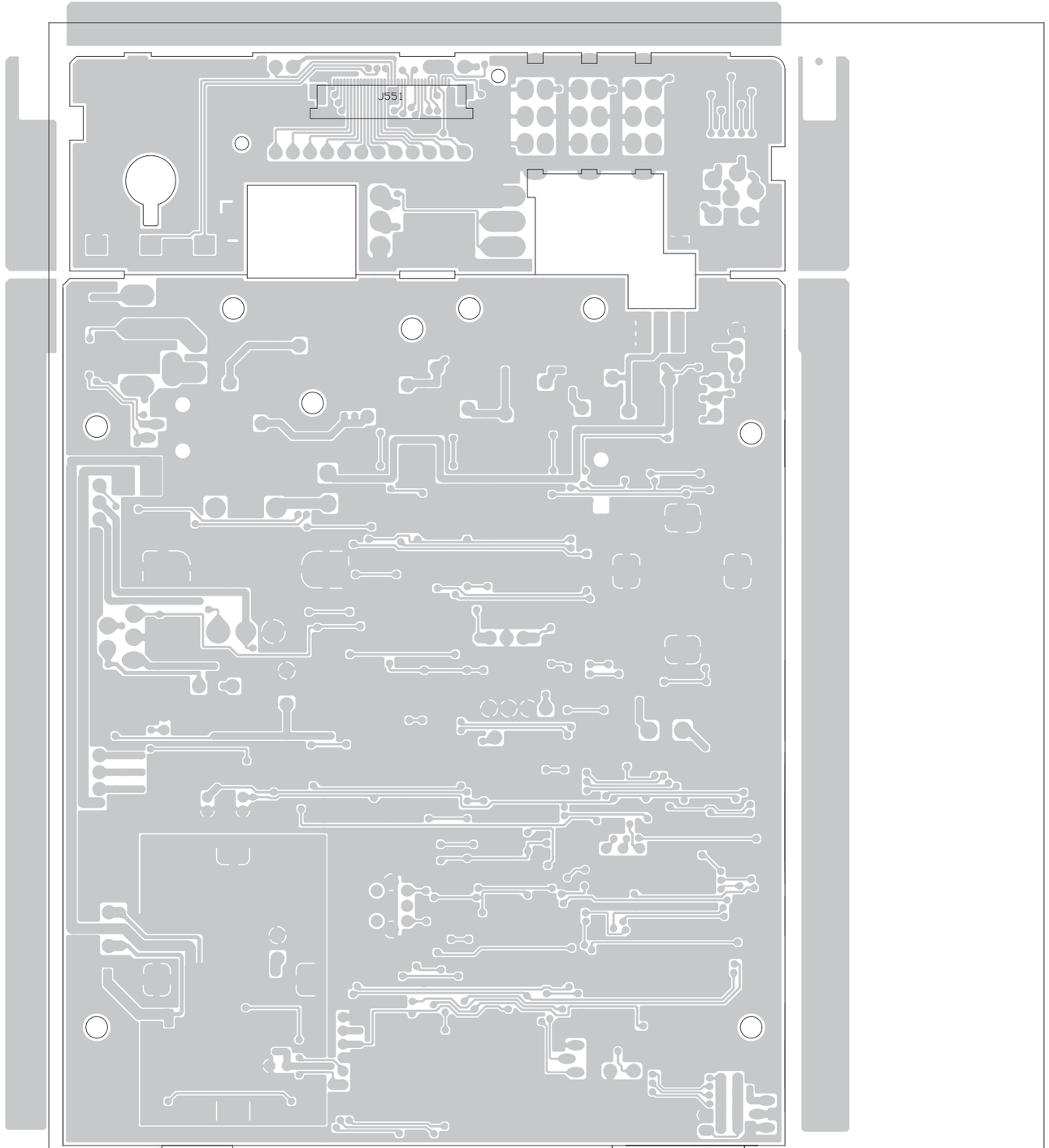

NOTES:

1. RESISTANCE VALUES ARE SHOWN IN OHMS UNLESS OTHERWISE NOTED. (K=KILO OHM, M=MEG OHM)
2. RESISTOR WATTAGES ARE 1/6W UNLESS OTHERWISE NOTED.
3. CAPACITANCE VALUES ARE INDICATED IN MICRO FARADS UNLESS OTHERWISE NOTED. (P=MICRO-MICRO FARAD)
4. ALL CAPACITORS TEMPERATURE CHARACTERISTICS ARE ZF UNLESS OTHERWISE NOTED.
5. ALL CAPACITORS TEMPERATURE CHARACTERISTICS ARE SL (LESS THAN 1000PF) OR ZF (MORE THAN 1000PF) UNLESS OTHERWISE NOTED.

DESIGN. BY	DRAWN. BY	UNIDEN NO.	MODEL NO.
Mar. 13. 2015	Mar. 13. 2015	UT405ZV	HENRY CLASSIC 12/24V
Yamazaki	Yamazaki	TITLE	
CHECK. BY	APPRO. BY	CHIP LAYOUT BOTTOM VIEW 1/2	
		DRAWING NO.	
REV. NO.		UNIDEN CORP.	

DWG. NO.
PCB No.
ASSY
FILM
BOTTOM PATTERN

HENRY classic
ASC
12/24

COMPONENTS LIST

COMPONENTS LIST

HENRY Classic 12/24V Parts List (MECHA)

	Parts Code	Description	Spec	Qty	Remarks
1	SSCW193006N	SCREW:BIND HD +	M3X6 NI	1	TR
2	HHT104630ZZ	HEAT SINK	A1070P(AL)	1	TR
3	HSD108321ZZ	SHIELD	SPTE	1	MAIN PCB
4	HSD108324ZZ	SHIELD	SPTE	1	CASE
5	HSD108325ZZ	SHIELD	SPTE	1	COVER
6	HSDC4B2005Z	SHIELD COVER	SPTE	1	MAIN PCB
7	HSDC4E6838Z	SHIELD CASE	SPTE	1	MAIN PCB
8	RPT104631ZZ	PLATE	**	1	TR
9	GHDL418694A	HOLDER:LED	ABS BLACK	1	UT317F FRONT:PCB
10	SSCW133005N	SCREW:FLAT HD +	M3X5 NI	2	CASE:FRONT
11	SSCW193006B	SCREW:BIND HD +	M3X6 BLK NI	4	SPEAKER
12	SSCW193008N	SCREW:BIND HD	M3X8 NI	1	TR(REAR)
13	SSCW343006B	SCREW:TAPTIGHT BIND HD +	M3X6 BLK NI	8	COVER
14	SSCW343006N	SCREW:TAPTIGHT BIND HD +	M3X6 NI	2	HOLDER DEVICE
15	SSCW450030N	NUT:HEX	M3 NI	1	TR(REAR)
16	SSCW480030Z	NUT:FLANGE	M3 ZMC	4	SPEAKER
17	SSCW343006N	SCREW:TAPTIGHT BIND HD +	M3X6 NI	7	MAIN:PCB
18	SSCW343006N	SCREW:TAPTIGHT BIND HD +	M3X6 NI	3	SHIELD(ANT JACK)
19	GBSG4C9670Z	BUSHING	POM	1	UT375Z TRANSISTOR
20	GCF108630ZZ	CASE FRONT	ABS	1	
21	GNBC418695Z	KNOB:CHANNEL	ABS BLACK	1	UT-317Z
22	GNBY418593A	KNOB	ABS BLACK	3	UT-316Z
23	HCAS3B9766Z	COVER:BOTTOM	VINY TOP	1	UT370ZH
24	HCH108608ZZ	CHASSIS	SECC	1	
25	HCMT318698C	COVER:TOP	VINYTOP E 0.75T BLACK	1	UT317Z
26	HETC4F2308Z	SPRING PLATE	**	1	
27	HHD108610ZZ	HOLDER DEVICE	SECC	1	
28	HHT108609ZZ	HEAT SINK	A1070P(AL)	1	
29	HSD108611ZZ	SHIELD	SECC	1	ANT JACK/CHASSIS-MAIN PCB
30	HTM100951ZZ	CONTACT PLATE	**	1	SQ/RF
31	HTM100952ZZ	CONTACT PLATE	**	1	UT383Z MIC JACK
32	KDPZ3C0840Z	PLATE:DISPLAY	PC	1	UT370Z

33	MSCW4F2297Z	NUT	**	1	
34	PLBC482147Z	LABEL:WARNING DC CORD	PAPER PRINT	1	DC CORD
35	PLBZ493437A	WIRING STICKER	**	1	COVER TOP
36	PLD108740ZZ	LABEL ID	**	1	CHASSIS REAR.PDV
37	RCUN4B9842Z	CUSHION	NEOPRENE	1	UT370ZH TRANS
38	RCUN4C0269Z	CUSHION	NEOPRENE	1	UT370ZH PCB
39	RETC490493A	SPACER	WOOL TACK 0.5T BLACK	2	CHASSIS
40	RUTC418435Z	WOOL-COATED PAPER:WOOL TACK	WOOL PAPER 100*5*0.3T	4	COVER:TOP*2 COVER:BOTTOM*2
41	TSTD0200003	SPRING PLATE:KNOB	D6.02XL9.53	4	
42	SSCW293508N	SCREW:TAPPING ROUND HD +	D3.5X8 NI	2	HANGER MIC ACC
43	SSCW295010N	SCREW:TAPPING ROUND HD +	D5X10 NI	2	MOUNTING BRACKET ACC
44	SSCW530035N	WASHER:LOCK	D3.5 NI	2	HANGER MIC ACC
45	SSCW540050N	WASHER:STAR	D5 NI	2	MOUNTING BRACKET ACC
46	GMSC480407A	SCREW:MOUNTING	ABS BLACK	2	MOUNTING BRACKET ACC
47	HBCT418696B	MOUNTING BRACKET	SPCC 1.2T MFZN3	1	COVER ACC
48	HMHG402919Z	HANGER:MICROPHONE	SPCC 1.0T NI	1	COVER ACC
49	PLBB4D4482Z	LABEL:BARCODE	PAPER	2	D/BOX*1, S/CBOX*1
50	PLBZ493436Z	CB STICKER (S)	**	1	
51	U01UT405ZZZ	OWNERS MANUAL	**	1	
52	WBAG4C2090Z	PACKING BAG	**	1	UNIT
53	WBAG4C3715Z	PACKING BAG	**	1	ACC
54	WBAG4C3716Z	PACKING BAG	**	2	DC CORD*1, MOUNTING BARCKET*1
55	WBAG4C3719A	PACKING BAG	**	0.08333	1/12, S/C
56	WDB108741ZZ	DISPLAY BOX	**	1	
57	WSC108742ZZ	SHIPPING CARTON BOX	**	0.08333	1/12,PDV
58	WSL108657ZZ	SLEEVE	**	1	UNIT
59	WSLV4C0278Z	SLEEVE	**	1	UT370Z, MIC
60	WSLV4C0279Z	SLEEVE	**	1	UT370Z, ACC

HENRY Classic 12/24V Parts List (ELEC)

Ref	Description	Spec	Parts Code
B1	PCB:MAIN	PA-0504AA 1/4	BPAG0504AA1
C1	C:CERAMIC M/L (1005) TAPE	0.01uF 25V K B	BCNB511035G
C2	C:CERAMIC M/L (1005) TAPE	22PF 50V J CH	BCNA812204G
C3	C:CERAMIC M/L (1005) TAPE	56PF 50V J CH	BCNA815604G
C4	C:CERAMIC M/L (1005) TAPE	0.01uF 25V K B	BCNB511035G
C5	C:CERAMIC M/L (1005) TAPE	15PF 50V J CH	BCNA811504G
C6	C:CERAMIC M/L (1005) TAPE	0.01uF 25V K B	BCNB511035G
C7	C:CERAMIC M/L (1608) TAPE	820PF 50V J CH	BCMM818214G
C8	C:CERAMIC M/L (1005) TAPE	0.01uF 25V K B	BCNB511035G
C9	C:CERAMIC M/L (1608) TAPE	4.7UF 6.3V K B	BCML904755G
C10	C:CERAMIC M/L (1005) TAPE	22PF 50V J CH	BCNA812204G
C11	C:CERAMIC M/L (1005) TAPE	0.01uF 25V K B	BCNB511035G
C12	C:CERAMIC M/L (1005) TAPE	39PF 50V J CH	BCNA813904G
C13	C:CERAMIC M/L (1005) TAPE	0.01uF 25V K B	BCNB511035G
C14	C:CERAMIC M/L (1005) TAPE	15PF 50V J CH	BCNA811504G
C15	C:CERAMIC M/L (1005) TAPE	0.01uF 25V K B	BCNB511035G
C16	C:CERAMIC M/L (1005) TAPE	330PF 16V J CH	BCNA313314G
C21	C:CERAMIC M/L (1005) TAPE	33PF 50V J CH	BCNA813304G
C22	C:CERAMIC M/L (1005) TAPE	0.01uF 25V K B	BCNB511035G
C23	C:CERAMIC M/L (1005) TAPE	22PF 50V J CH	BCNA812204G
C27	C:CERAMIC M/L (1005) TAPE	0.1u 10V K B	BCNB111045G
C28	C:CERAMIC M/L (1608) TAPE	680PF 50V J CH	BCMM816814G
C29	C:CERAMIC M/L (1005) TAPE	0.1u 10V K B	BCNB111045G
C30	C:CERAMIC M/L (1005) TAPE	0.001u 50V K B	BCNB811025G
C31	C:CERAMIC M/L (1005) TAPE	220PF 25V J CH	BCNA512214G
C32	C:CERAMIC M/L (1005) TAPE	10PF 50V D CH	BCNA811002G
C33	C:CERAMIC M/L (1005) TAPE	180PF 50V J CH	BCNA811814G
C34	C:CERAMIC M/L (1005) TAPE	0.1u 10V K B	BCNB111045G
C35	C:CERAMIC M/L (1005) TAPE	0.1u 10V K B	BCNB111045G
C36	C:CERAMIC M/L (1608) TAPE	390PF 50V J CH	BCMM813914G
C37	C:CERAMIC M/L (1608) TAPE	390PF 50V J CH	BCMM813914G
C38	C:CERAMIC M/L (1005) TAPE	0.1u 10V K B	BCNB111045G
C39	C:CERAMIC M/L (1005) TAPE	0.1u 10V K B	BCNB111045G
C40	C:CERAMIC M/L (1005) TAPE	56PF 50V J CH	BCNA815604G
C41	C:CERAMIC M/L (1005) TAPE	0.001u 50V K B	BCNB811025G
C42	C:CERAMIC M/L (1608) TAPE	2.2UF 10V K B	BCML112295G
C43	C:CERAMIC M/L (1005) TAPE	100PF 50V J CH	BCNA811014G
C44	C:CERAMIC M/L (1005) TAPE	220PF 50V J CH	BCNA812214G

40	C45	C:CERAMIC M/L (1005) TAPE	0.1u 10V K B	BCNB111045G
41	C46	C:CERAMIC M/L (1005) TAPE	0.022uF 25V K B	BCNB512235G
42	C47	C:CERAMIC M/L (1005) TAPE	100PF 50V J CH	BCNA811014G
43	C48	C:CERAMIC M/L (1608) TAPE	390PF 50V J CH	BCMM813914G
44	C49	C:CERAMIC M/L (1005) TAPE	0.1u 10V K B	BCNB111045G
45	C50	C:CERAMIC M/L (1608) TAPE	390PF 50V J CH	BCMM813914G
46	C51	C:CERAMIC M/L (1005) TAPE	1UF 6.3V K B	BCNB901055G
47	C52	C:CERAMIC M/L (1005) TAPE	1UF 6.3V K B	BCNB901055G
48	C53	C:CERAMIC M/L (1005) TAPE	0.1u 10V K B	BCNB111045G
49	C54	C:CERAMIC M/L (1005) TAPE	1UF 6.3V K B	BCNB901055G
50	C55	C:CERAMIC M/L (1005) TAPE	0.0047UF 50V K B	BCNB814725G
51	C56	C:CERAMIC M/L (1005) TAPE	0.022uF 25V K B	BCNB512235G
52	C58	C:CERAMIC M/L (1005) TAPE	0.033uF 25V K B	BCNB513335G
53	C68	C:CERAMIC M/L (1005) TAPE	0.01uF 25V K B	BCNB511035G
54	C69	C:CERAMIC M/L (1608) TAPE	2.2UF 10V K B	BCML112295G
55	C70	C:CERAMIC M/L (1005) TAPE	1UF 6.3V K B	BCNB901055G
56	C71	C:CERAMIC M/L (1005) TAPE	0.01uF 25V K B	BCNB511035G
57	C72	C:CERAMIC M/L (1005) TAPE	0.1u 10V K B	BCNB111045G
58	C73	C:CERAMIC M/L (1005) TAPE	0.1u 10V K B	BCNB111045G
59	C74	C:CERAMIC M/L (1005) TAPE	0.1u 10V K B	BCNB111045G
60	C75	C:CERAMIC M/L (1005) TAPE	0.1u 10V K B	BCNB111045G
61	C76	C:CERAMIC M/L (1005) TAPE	0.001u 50V K B	BCNB811025G
62	C79	C:CERAMIC M/L (1608) TAPE	2.2UF 10V K B	BCML112295G
63	C201	C:CERAMIC M/L (1608) TAPE	18PF 50V J CH	BCMM811804G
64	C202	C:CERAMIC M/L (1608) TAPE	18PF 50V J CH	BCMM811804G
65	C203	C:CERAMIC M/L (1005) TAPE	0.01uF 25V K B	BCNB511035G
66	C204	C: CERAMIC M/L(1005) TAPE	0.5PF 50V C CH	BCNA815081G
67	C205	C:CERAMIC M/L (1608) TAPE	0.01UF 50V K B	BCML811035G
68	C206	C:CERAMIC M/L (1608) TAPE	0.01UF 50V K B	BCML811035G
69	C207	C:CERAMIC M/L (1005) TAPE	0.1u 10V K B	BCNB111045G
70	C208	C:CERAMIC M/L (1005) TAPE	0.01uF 25V K B	BCNB511035G
71	C209	C:CERAMIC M/L (1005) TAPE	220PF 50V J CH	BCNA812214G
72	C210	C:CERAMIC M/L (1608) TAPE	0.01UF 50V K B	BCML811035G
73	C211	C:CERAMIC M/L (1005) TAPE	150PF 50V J CH	BCNA811514G
74	C212	C:CERAMIC M/L (1005) TAPE	330PF 16V J CH	BCNA313314G
75	C213	C:CERAMIC M/L (1005) TAPE	0.01uF 25V K B	BCNB511035G
76	C214	C:CERAMIC M/L (1005) TAPE	0.01uF 25V K B	BCNB511035G
77	C215	C:CERAMIC M/L (1005) TAPE	39PF 50V J CH	BCNA813904G
78	C216	C:CERAMIC M/L (1608) TAPE	100PF 50V J CH	BCMM811014G
79	C217	C:CERAMIC M/L (1608) TAPE	82PF 50V J CH	BCMM818204G
80	C218	C:CERAMIC M/L (1608) TAPE	82PF 50V J CH	BCMM818204G

81	C219	C:CERAMIC M/L (1608) TAPE	18PF 50V J CH	BCMM811804G
82	C220	C:CERAMIC M/L (1608) TAPE	8PF 50V C CH	BCMM818091G
83	C222	C:CERAMIC M/L (1608) TAPE	82PF 50V J CH	BCMM818204G
84	C223	C:CERAMIC M/L (1608) TAPE	1UF 10V K B	BCML111055G
85	C224	C:CERAMIC M/L (1005) TAPE	0.01uF 25V K B	BCNB511035G
86	C225	C:CERAMIC M/L (1608) TAPE	10PF 50V D CH	BCMM811002G
87	C227	C:CERAMIC M/L (1608) TAPE	100PF 50V J CH	BCMM811014G
88	C228	C:CERAMIC M/L (1608) TAPE	100PF 50V J CH	BCMM811014G
89	C229	C:CERAMIC M/L (1608) TAPE	100PF 50V J CH	BCMM811014G
90	C230	C:CERAMIC M/L (1608) TAPE	180PF 50V J CH	BCMM811814G
91	C301	C:CERAMIC M/L (1005) TAPE	100PF 50V J CH	BCNA811014G
92	C302	C:CERAMIC M/L (1005) TAPE	0.01uF 25V K B	BCNB511035G
93	C303	C:CERAMIC M/L (1608) TAPE	27PF 50V J CH	BCMM812704G
94	C304	C:CERAMIC M/L (1005) TAPE	100PF 50V J CH	BCNA811014G
95	C305	C:CERAMIC M/L (1005) TAPE	0.01uF 25V K B	BCNB511035G
96	C306	C:CERAMIC M/L (1005) TAPE	68PF 50V J CH	BCNA816804G
97	C307	C:CERAMIC(1608)	CZ-387 EMK107SD103JA-T	BCZG0387001
98	C308	C:CERAMIC M/L (1005) TAPE	100PF 50V J CH	BCNA811014G
99	C309	C:CERAMIC M/L (1005) TAPE	100PF 50V J CH	BCNA811014G
100	C310	C:CERAMIC M/L (1005) TAPE	10PF 50V D CH	BCNA811002G
101	C311	C:CERAMIC M/L (1005) TAPE	12PF 50V J CH	BCNA811204G
102	C312	C:CERAMIC M/L (1005) TAPE	680p 50V K B	BCNB816815G
103	C313	C:CERAMIC M/L (1005) TAPE	56PF 50V J CH	BCNA815604G
104	C314	C:CERAMIC M/L (1005) TAPE	0.01uF 25V K B	BCNB511035G
105	C315	C:CERAMIC M/L (1005) TAPE	0.01uF 25V K B	BCNB511035G
106	C316	C:CERAMIC M/L (1005) TAPE	0.1u 10V K B	BCNB111045G
107	C317	C:CERAMIC M/L (1005) TAPE	15PF 50V J CH	BCNA811504G
108	C318	C:CERAMIC M/L (1005) TAPE	0.01uF 25V K B	BCNB511035G
109	C319	C:CERAMIC M/L (1005) TAPE	470p 50V K B	BCNB814715G
110	C320	C:CERAMIC M/L (1005) TAPE	470p 50V K B	BCNB814715G
111	C321	C:CERAMIC M/L (1005) TAPE	470p 50V K B	BCNB814715G
112	C322	C:CERAMIC M/L (3216) TAPE	10UF 10V K B	BCXS111065G
113	C323	C:TANTALUM	SA-CA45-1V224M-RA C-488	BCWW662286G
114	C324	C:TANTALUM	SA-CA45-1C225M-RA C-488	BCWW312296G
115	C325	C:CERAMIC M/L (1005) TAPE	0.01uF 25V K B	BCNB511035G
116	C327	C:CERAMIC M/L (1005) TAPE	0.01uF 25V K B	BCNB511035G
117	C330	C:CERAMIC M/L (1005) TAPE	0.015uF 25V K B	BCNB511535G
118	C401	C:CERAMIC M/L (2125) TAPE	4.7UF 6.3V K B	BCXT904795G
119	C402	C:CERAMIC M/L (1608) TAPE	0.1UF 50V K B	BCML811045G
120	C403	C:CERAMIC M/L (1005) TAPE	0.01uF 25V K B	BCNB511035G
121	C404	C:CERAMIC M/L (1005) TAPE	0.01uF 25V K B	BCNB511035G

122	C405	C:CERAMIC M/L (1005) TAPE	0.1u 10V K B	BCNB111045G
123	C406	C:CERAMIC M/L (1005) TAPE	0.1u 10V K B	BCNB111045G
124	C407	C:CERAMIC M/L (1005) TAPE	0.0018u 50V K B	BCNB811825G
125	C408	C:CERAMIC M/L (1005) TAPE	18PF 50V J CH	BCNA811804G
126	C409	C:CERAMIC M/L (1005) TAPE	390p 50V K B	BCNB813915G
127	C410	C:CERAMIC M/L (1608) TAPE	0.0022UF 50V K B	BCML812225G
128	C412	C:CERAMIC M/L (1005) TAPE	10PF 50V D CH	BCNA811002G
129	C413	C:CERAMIC M/L (1005) TAPE	0.1u 10V K B	BCNB111045G
130	C414	C:CERAMIC M/L (1005) TAPE	0.1u 10V K B	BCNB111045G
131	C415	C:CERAMIC M/L (1608) TAPE	0.47UF 16V K B	BCML314745G
132	C416	C:CERAMIC M/L (1005) TAPE	1uF 10V M B	BCNB111056G
133	C417	C:CERAMIC M/L (1005) TAPE	0.1u 10V K B	BCNB111045G
134	C418	C:CERAMIC M/L (1005) TAPE	1UF 6.3V K B	BCNB901055G
135	C419	C:CERAMIC M/L (1005) TAPE	0.1u 10V K B	BCNB111045G
136	C420	C:CERAMIC M/L (1005) TAPE	0.1u 10V K B	BCNB111045G
137	C421	C:CERAMIC M/L (1608) TAPE	0.22UF 16V K B	BCML312245G
138	C422	C:CERAMIC M/L (1608) TAPE	2.2UF 10V K B	BCML112295G
139	C423	C:CERAMIC M/L (1005) TAPE	0.01uF 25V K B	BCNB511035G
140	C424	C:CERAMIC M/L (1005) TAPE	0.047uF 16V K B	BCNB314735G
141	C425	C:CERAMIC M/L (1005) TAPE	0.01uF 25V K B	BCNB511035G
142	C426	C:ELECTROLYTIC	470UF 10V M C-480	BCNZ114716G
143	C428	C:CERAMIC M/L (2125) TAPE	10UF 16V K B	BCXT311065G
144	C429	C:CERAMIC M/L (1005) TAPE	1uF 10V M B	BCNB111056G
145	C430	C:CERAMIC M/L (1005) TAPE	82PF 50V J CH	BCNA818204G
146	C431	C:CERAMIC M/L (1608) TAPE	2.2UF 10V K B	BCML112295G
147	C434	C:ELECTROLYTIC	470UF 25V M C-480	BCNZ514716G
148	C435	C:ELECTROLYTIC	100UF 10V M C-480	BCNZ111016G
149	C436	C:CERAMIC M/L (1608) TAPE	0.1UF 50V K B	BCML811045G
150	C437	C:CERAMIC M/L (1005) TAPE	0.0047UF 50V K B	BCNB814725G
151	C438	C:CERAMIC M/L (1608) TAPE	0.1UF 50V K B	BCML811045G
152	C439	C:ELECTROLYTIC	47UF 25V M C-480	BCNZ514706G
153	C441	C:ELECTROLYTIC	47UF 25V M C-480	BCNZ514706G
154	C442	C:CERAMIC M/L (2125) TAPE	4.7UF 6.3V K B	BCXT904795G
155	C449	C:CERAMIC M/L (1005) TAPE	0.01uF 25V K B	BCNB511035G
156	C450	C:ELECTROLYTIC	470UF 25V M C-480	BCNZ514716G
157	C451	C:CERAMIC M/L (1608) TAPE	0.1UF 50V K B	BCML811045G
158	C452	C:CERAMIC M/L (1608) TAPE	0.1UF 50V K B	BCML811045G
159	C453	C:CERAMIC M/L (1608) TAPE	0.1UF 50V K B	BCML811045G
160	C454	C:CERAMIC M/L (1005) TAPE	0.0047UF 50V K B	BCNB814725G
161	C455	C:CERAMIC M/L (2125) TAPE	10UF 16V K B	BCXT311065G
162	C456	C:CERAMIC M/L (1005) TAPE	0.0015u 50V K B	BCNB811525G

163	C491	C:ELECTROLYTIC	220UF 50V M C-480	BCNZ812216G
164	C492	C:CERAMIC M/L (1005) TAPE	0.01uF 25V K B	BCNB511035G
165	C493	C:CERAMIC M/L (1005) TAPE	0.01uF 25V K B	BCNB511035G
166	C494	C:CERAMIC M/L (1005) TAPE	680p 50V K B	BCNB816815G
167	C495	C:ELECTROLYTIC	220UF 25V M C-480	BCNZ512216G
168	C496	C:CERAMIC M/L (3216) TAPE	1UF 50V K B	BCXS811055G
169	C497	C:CERAMIC M/L (1005) TAPE	0.0015u 50V K B	BCNB811525G
170	C498	C:ELECTROLYTIC	100UF 25V M C-480	BCNZ511016G
171	C499	C:CERAMIC M/L (3216) TAPE	1UF 50V K B	BCXS811055G
172	D1	DIODE	KDS114E-RTK/P	BDAG1269001
173	D2	DIODE	KDS114E-RTK/P	BDAG1269001
174	D3	DIODE	KDS160E-RTK/P	BDAG1270001
175	D4	DIODE	KDS160E-RTK/P	BDAG1270001
176	D5	DIODE	KDS160E-RTK/P	BDAG1270001
177	D6	DIODE	KDS160E-RTK/P	BDAG1270001
178	D7	DIODE	KDS160E-RTK/P	BDAG1270001
179	D8	DIODE	KDS160E-RTK/P	BDAG1270001
180	D9	DIODE	KDS160E-RTK/P	BDAG1270001
181	D10	DIODE	KDS160E-RTK/P	BDAG1270001
182	D11	DIODE	BAR43S	BDAG1590001
183	D12	DIODE	BAR43S	BDAG1590001
184	D13	DIODE	BAR43S	BDAG1590001
185	D204	DIODE	KDS160E-RTK/P	BDAG1270001
186	D302	DIODE:VARICAP	1SV262	BDAG1249001
187	D303	DIODE:VARICAP	DA-1380 1SV325(TPH3_F)	BDAG1380001
188	D403	DIODE	KDS160E-RTK/P	BDAG1270001
189	D404	DIODE	KDS160E-RTK/P	BDAG1270001
190	D405	DIODE	RL203G	BDAG1683001
191	D406	DIODE	KDS160E-RTK/P	BDAG1270001
192	D407	DIODE	SDB30A40	BDAG1355001
193	D408	DIODE:ZENER	HZK6B	BDAG1423009
194	D409	DIODE	KDS160E-RTK/P	BDAG1270001
195	D410	DIODE	KDS160E-RTK/P	BDAG1270001
196	D411	DIODE:ZENER	HZK6C	BDAG1423004
197	D412	DIODE	KDS160E-RTK/P	BDAG1270001
198	D491	DIODE	NA05QSA065-TE12L	BDAG1502001
199	FT1	FILTER:CRYSTAL	FL-1087 10M07AZ	BFLG1087001
200	FT2	FILTER:CERAMIC	FL-1186 LT455HTW	BFLG1186001
201	IC5	INTEGRATED CIRCUIT	MC3361	BDEG5186003
202	IC6	INTEGRATED CIRCUIT	NJM12904R-TE1-#ZZZB	BDEG4463003
203	IC7	INTEGRATED CIRCUIT	NJM12904R-TE1-#ZZZB	BDEG4463003

204	IC301	INTEGRATED CIRCUIT	MCD2926	BDEG5165003
205	IC401	INTEGRATED CIRCUIT	NJM12904R-TE1-#ZZZB	BDEG4463003
206	IC402	INTEGRATED CIRCUIT	CJ431(SOT23)	BDEG5121003
207	IC403	INTEGRATED CIRCUIT	FM24C02A-SO-T-G	BDEG5191003
208	IC404	IC:MICOM (FLASH OR OTP)	R5F101GDAFB#V0	BDEG5486001
209	IC405	INTEGRATED CIRCUIT	XC6109C43ANR	BDEG4680003
210	IC406	INTEGRATED CIRCUIT	TDA2003L-TB5-T	BDEG5194001
211	IC491	IC:REGULATOR	BD9009HFP-TR	BDEG5524003
212	J402	JACK:EARPHONE	JK-1310 PJ-305C	BJKG1310001
213	J404	JACK	JK-1249 IMSA-9210B-1-03Z058-PT1	BJKG1249003
214	J405	JACK	JK-1163 9639S-35Y911	BJKG1163035
215	J406	JACK	JK-1633 A2001WV2-6P	BJKG1633006
216	J407	JACK	JK-1633 A2001WV2-3P	BJKG1633003
217	L1	INDUCTOR:MOLDED CHIP	LZ-365 SDWL2520CR47GSTF 0.47UH	BLZG0365478
218	L2	INDUCTOR:MOLDED CHIP	LZ-365 SDWL2520CR39GSTF 0.39UH	BLZG0365398
219	L3	INDUCTOR:MOLDED CHIP	LZ-226 SGMI1608M1R0K T	BLZG0226109
220	L4	INDUCTOR:MOLDED CHIP	LZ-365 SDWL2520CR47GSTF 0.47UH	BLZG0365478
221	L7	INDUCTOR:MOLDED CHIP	LZ-226 SGMI1608M1R2K T	BLZG0226129
222	L8	INDUCTOR:MOLDED CHIP	LZ-226 SGMI1608K6R8K T	BLZG0226689
223	L9	INDUCTOR:MOLDED CHIP	LZ-226 SGMI1608M3R9K T	BLZG0226399
224	L10	INDUCTOR:WIND CHIP TAPE	LZ-393 SDWL3225F471JTF	BLZG0393471
225	L12	COIL	LB-1301 7DL-C7306-LF	BLBG1301001
226	L13	COIL	LD-332 FDL-332	BLDH0332001
227	L14	COIL	LD-332 FDL-332	BLDH0332001
228	L15	INDUCTOR:WIND CHIP TAPE	LZ-393 SDWL3225F101JTF	BLZG0393101
229	L16	INDUCTOR:MOLDED CHIP	LZ-365 SDWL2520CR22GSTF 220NH	BLZG0365228
230	L201	COIL	LE-475 SZFDLLE-475	BLEH0475001
231	L202	COIL	LE-475 SZFDLLE-475	BLEH0475001
232	L203	COIL	LE-475 SZFDLLE-475	BLEH0475001
233	L204	COIL	LE-475 SZFDLLE-475	BLEH0475001
234	L205	COIL	LE-475 SZFDLLE-475	BLEH0475001
235	L206	INDUCTOR:MOLDED CHIP	LZ-365 SDWL2520CR27GSTF 0.27UH	BLZG0365278
236	L207	INDUCTOR:MOLDED CHIP	LZ-365 SDWL2520C68NGSTF 68NH	BLZG0365687
237	L208	COIL	LE-633 D4 7 1/2T	BLEG0633001
238	L209	INDUCTOR:MOLDED CHIP	LZ-341 SDCL1608CR27JTDF	BLZG0341278
239	L210	LZ:INDUCTOR:MOLDED CHIP	LZ-382 UPZ2012E221-3R0TF	BLZG0382001
240	L211	INDUCTOR:MOLDED CHIP	LZ-226 SGMI1608M1R0K T	BLZG0226109
241	L302	INDUCTOR:MOLDED CHIP	LZ-365 SDWL2520CR39GSTF 0.39UH	BLZG0365398
242	L303	INDUCTOR:MOLDED CHIP	LZ-365 SDWL2520CR39GSTF 0.39UH	BLZG0365398
243	L401	INDUCTOR:MOLDED CHIP	LZ-417 UPZ2012E102-1R5TF	BLZG0417001

244	L402	INDUCTOR:MOLDED CHIP	LZ-226 SGMI1608M2R2K T	BLZG0226229
245	L403	INDUCTOR:MOLDED CHIP	LZ-417 UPZ2012E102-1R5TF	BLZG0417001
246	L491	LZ:INDUCTOR:MOLDED	LZ-379 SWRB1207A-330MT	BLZG0379330
247	L492	INDUCTOR:MOLDED	LZ-395 SWPA8040S100MT	BLZG0395100
248	PG1	PLUG	PG-185 IMSA-9215H-T	BPGG0185001
249	Q1	TRANSISTOR	DB-1326 MMBTSC2714Y	BDBN1326001
250	Q2	TRANSISTOR	DB-1326 MMBTSC2714Y	BDBN1326001
251	Q3	TRANSISTOR	DB-1326 MMBTSC2714Y	BDBN1326001
252	Q5	TRANSISTOR	DB-1326 MMBTSC2714Y	BDBN1326001
253	Q6	TRANSISTOR	DB-1326 MMBTSC2714Y	BDBN1326001
254	Q8	TRANSISTOR	DB-1326 MMBTSC2714Y	BDBN1326001
255	Q9	TRANSISTOR	DB-1259 KTC3875S-GR-RTK/P TAPE	BDBN1259001
256	Q10	TRANSISTOR	DB-1259 KTC3875S-GR-RTK/P TAPE	BDBN1259001
257	Q11	TRANSISTOR	DB-1259 KTC3875S-GR-RTK/P TAPE	BDBN1259001
258	Q19	TRANSISTOR	DB-1259 KTC3875S-GR-RTK/P TAPE	BDBN1259001
259	Q202	TRANSISTOR	DB-1373 2SC2314 TO-126	BDBN1373001
260	Q203	TRANSISTOR	DB-1340 ST2SC3202-Y	BDBN1340001
261	Q204	TRANSISTOR	DB-1326 MMBTSC2714Y	BDBN1326001
262	Q301	TRANSISTOR	DB-1174 2SC4226-R24 T1	BDBL4226646
263	Q302	TRANSISTOR	DB-1174 2SC4226-R24 T1	BDBL4226646
264	Q303	TRANSISTOR	DB-1300 2SD2114K	BDBM2114000
265	Q304	TRANSISTOR	DB-1259 KTC3875S-GR-RTK/P TAPE	BDBN1259001
266	Q401	TRANSISTOR	DB-1343 L2SD1781KRLT1G	BDBN1343001
267	Q402	TRANSISTOR	DB-1259 KTC3875S-GR-RTK/P TAPE	BDBN1259001
268	Q403	TRANSISTOR	DB-1259 KTC3875S-GR-RTK/P TAPE	BDBN1259001
269	Q404	TRANSISTOR	DB-1296 ST2SD882EU	BDBN1296001
270	Q405	TRANSISTOR	DB-1296 ST2SD882EU	BDBN1296001
271	Q406	TRANSISTOR	DB-1326 MMBTSC2714Y	BDBN1326001
272	Q407	TRANSISTOR	DB-1343 L2SD1781KRLT1G	BDBN1343001
273	Q409	TRANSISTOR	DB-1259 KTC3875S-GR-RTK/P TAPE	BDBN1259001
274	Q412	TRANSISTOR	DB-1290 LMBT3906LT1G	BDBN1290001
275	Q415	TRANSISTOR	DB-1290 LMBT3906LT1G	BDBN1290001
276	Q416	TRANSISTOR	DB-1259 KTC3875S-GR-RTK/P TAPE	BDBN1259001
277	Q417	TRANSISTOR	DB-1296 ST2SD882EU	BDBN1296001
278	Q418	TRANSISTOR	DB-1259 KTC3875S-GR-RTK/P TAPE	BDBN1259001
279	Q419	TRANSISTOR	DB-1259 KTC3875S-GR-RTK/P TAPE	BDBN1259001
280	Q420	TRANSISTOR	DB-1259 KTC3875S-GR-RTK/P TAPE	BDBN1259001
281	Q421	TRANSISTOR	DB-1259 KTC3875S-GR-RTK/P TAPE	BDBN1259001
282	Q422	TRANSISTOR	DB-1381 KTA1658-Y-U/PF	BDBN1381001

283	Q423	TRANSISTOR	DB-1381 KTA1658-Y-U/PF	BDBN1381001
284	Q424	TRANSISTOR	DB-1291 L2SA1365FLT1G	BDBN1291001
285	Q426	TRANSISTOR	DB-1259 KTC3875S-GR-RTK/P TAPE	BDBN1259001
286	R1	R:CARBON FIXED CHIP(1005)	470 1/16W J 1005 TAPE	BRFA164714G
287	R2	R:CARBON FIXED CHIP(1005)	470 1/16W J 1005 TAPE	BRFA164714G
288	R3	R:CARBON FIXED CHIP(1005)	15K 1/16W J 1005 TAPE	BRFA161534G
289	R4	R:CARBON FIXED CHIP(1005)	4.7K 1/16W J 1005 TAPE	BRFA164724G
290	R5	R:CARBON FIXED CHIP(1005)	470 1/16W J 1005 TAPE	BRFA164714G
291	R6	R:CARBON FIXED CHIP(1005)	2.2K 1/16W J 1005 TAPE	BRFA162224G
292	R7	R:CARBON FIXED CHIP(5025)	220 1/2W J TAPE	BRFC122214G
293	R8	R:CARBON FIXED CHIP(1005)	100K 1/16W J 1005 TAPE	BRFA161044G
294	R9	R:CARBON FIXED CHIP(1005)	3.3K 1/16W J 1005 TAPE	BRFA163324G
295	R10	R:CARBON FIXED CHIP(1005)	1K 1/16W J 1005 TAPE	BRFA161024G
296	R11	R:CARBON FIXED CHIP(1005)	100 1/16W J 1005 TAPE	BRFA161014G
297	R12	R:CARBON FIXED CHIP(1005)	10 1/16W J 1005 TAPE	BRFA161004G
298	R13	R:CARBON FIXED CHIP(1005)	470 1/16W J 1005 TAPE	BRFA164714G
299	R14	R:CARBON FIXED CHIP(1005)	10 1/16W J 1005 TAPE	BRFA161004G
300	R15	R:CARBON FIXED CHIP(1005)	10 1/16W J 1005 TAPE	BRFA161004G
301	R16	R:CARBON FIXED CHIP(1005)	47 1/16W J 1005 TAPE	BRFA164704G
302	R26	R:CARBON FIXED CHIP(1005)	220 1/16W J 1005 TAPE	BRFA162214G
303	R27	R:CARBON FIXED CHIP(1005)	100 1/16W J 1005 TAPE	BRFA161014G
304	R28	R:CARBON FIXED CHIP(1005)	1M 1/16W J 1005 TAPE	BRFA161054G
305	R29	R:CARBON FIXED CHIP(1005)	3.3K 1/16W J 1005 TAPE	BRFA163324G
306	R30	R:CARBON FIXED CHIP(1005)	10K 1/16W J 1005 TAPE	BRFA161034G
307	R31	R:CARBON FIXED CHIP(1005)	22K 1/16W J 1005 TAPE	BRFA162234G
308	R32	R:CARBON FIXED CHIP(1005)	2.2K 1/16W J 1005 TAPE	BRFA162224G
309	R34	R:CARBON FIXED CHIP(1005)	680 1/16W J 1005 TAPE	BRFA166814G
310	R35	R:CARBON FIXED CHIP(1005)	2.2K 1/16W J 1005 TAPE	BRFA162224G
311	R36	R:CARBON FIXED CHIP(1005)	4.7 1/16W J 1005 TAPE	BRFA164794G
312	R37	R:CARBON FIXED CHIP(1005)	470 1/16W J 1005 TAPE	BRFA164714G
313	R38	R:CARBON FIXED CHIP(1005)	10K 1/16W J 1005 TAPE	BRFA161034G
314	R39	R:CARBON FIXED CHIP(1005)	1.5K 1/16W J 1005 TAPE	BRFA161524G
315	R40	R:CARBON FIXED CHIP(1005)	560 1/16W J 1005 TAPE	BRFA165614G
316	R41	R:CARBON FIXED CHIP(1005)	220K 1/16W J 1005 TAPE	BRFA162244G
317	R42	R:CARBON FIXED CHIP(1005)	100K 1/16W J 1005 TAPE	BRFA161044G
318	R43	R:CARBON FIXED CHIP(1005)	220K 1/16W J 1005 TAPE	BRFA162244G
319	R44	R:CARBON FIXED CHIP(1005)	100K 1/16W J 1005 TAPE	BRFA161044G
320	R45	R:CARBON FIXED CHIP(1005)	33K 1/16W J 1005 TAPE	BRFA163334G
321	R46	R:CARBON FIXED CHIP(1005)	10K 1/16W J 1005 TAPE	BRFA161034G
322	R47	R:CARBON FIXED CHIP(1005)	15K 1/16W J 1005 TAPE	BRFA161534G
323	R48	R:CARBON FIXED CHIP(1005)	680K 1/16W J 1005 TAPE	BRFA166844G

324	R50	R:CARBON FIXED CHIP(1005)	47 1/16W J 1005 TAPE	BRFA164704G
325	R51	R:CARBON FIXED CHIP(1005)	15K 1/16W J 1005 TAPE	BRFA161534G
326	R52	R:CARBON FIXED CHIP(1005)	2.2 1/16W J 1005 TAPE	BRFA162294G
327	R53	R:CARBON FIXED CHIP(1005)	470 1/16W J 1005 TAPE	BRFA164714G
328	R54	R:CARBON FIXED CHIP(1005)	3.9K 1/16W J 1005 TAPE	BRFA163924G
329	R55	R:CARBON FIXED CHIP(1005)	68K 1/16W J 1005 TAPE	BRFA166834G
330	R56	R:CARBON FIXED CHIP(1005)	10K 1/16W J 1005 TAPE	BRFA161034G
331	R57	R:CARBON FIXED CHIP(1005)	68K 1/16W J 1005 TAPE	BRFA166834G
332	R58	R:CARBON FIXED CHIP(1005)	68K 1/16W J 1005 TAPE	BRFA166834G
333	R59	R:CARBON FIXED CHIP(1005)	68K 1/16W J 1005 TAPE	BRFA166834G
334	R61	R:CARBON FIXED CHIP(1005)	22 1/16W J 1005 TAPE	BRFA162204G
335	R62	R:CARBON FIXED CHIP(1005)	330K 1/16W J 1005 TAPE	BRFA163344G
336	R63	R:CARBON FIXED CHIP(1005)	4.7K 1/16W J 1005 TAPE	BRFA164724G
337	R64	R:CARBON FIXED CHIP(1005)	33K 1/16W J 1005 TAPE	BRFA163334G
338	R65	R:CARBON FIXED CHIP(1005)	680K 1/16W J 1005 TAPE	BRFA166844G
339	R66	R:CARBON FIXED CHIP(1005)	10K 1/16W J 1005 TAPE	BRFA161034G
340	R67	R:CARBON FIXED CHIP(1005)	10K 1/16W J 1005 TAPE	BRFA161034G
341	R68	R:CARBON FIXED CHIP(1005)	4.7K 1/16W J 1005 TAPE	BRFA164724G
342	R69	R:CARBON FIXED CHIP(1005)	10K 1/16W J 1005 TAPE	BRFA161034G
343	R70	R:CARBON FIXED CHIP(1005)	47K 1/16W J 1005 TAPE	BRFA164734G
344	R71	R:CARBON FIXED CHIP(1005)	10K 1/16W J 1005 TAPE	BRFA161034G
345	R72	R:CARBON FIXED CHIP(1005)	10K 1/16W J 1005 TAPE	BRFA161034G
346	R73	R:CARBON FIXED CHIP(1005)	3.3K 1/16W J 1005 TAPE	BRFA163324G
347	R74	R:CARBON FIXED CHIP(1005)	10K 1/16W J 1005 TAPE	BRFA161034G
348	R75	R:CARBON FIXED CHIP(1005)	470K 1/16W J 1005 TAPE	BRFA164744G
349	R76	R:CARBON FIXED CHIP(1005)	2.2K 1/16W J 1005 TAPE	BRFA162224G
350	R77	R:CARBON FIXED CHIP(1005)	680 1/16W J 1005 TAPE	BRFA166814G
351	R78	R:CARBON FIXED CHIP(1005)	10K 1/16W J 1005 TAPE	BRFA161034G
352	R79	R:CARBON FIXED CHIP(1005)	0 1/16W J 1005 TAPE	BRFA160004G
353	R94	R:CARBON FIXED CHIP(1005)	220K 1/16W J 1005 TAPE	BRFA162244G
354	R95	R:CARBON FIXED CHIP(1005)	47K 1/16W J 1005 TAPE	BRFA164734G
355	R96	R:CARBON FIXED CHIP(1005)	100K 1/16W J 1005 TAPE	BRFA161044G
356	R97	R:CARBON FIXED CHIP(1005)	1.5K 1/16W J 1005 TAPE	BRFA161524G
357	R98	R:CARBON FIXED CHIP(1005)	4.7K 1/16W J 1005 TAPE	BRFA164724G
358	R99	R:CARBON FIXED CHIP(1608)	1K 1/10W J TAPE	BRFB011024G
359	R100	R:CARBON FIXED CHIP(1005)	100 1/16W J 1005 TAPE	BRFA161014G
360	R102	R:CARBON FIXED CHIP(1005)	33K 1/16W J 1005 TAPE	BRFA163334G
361	R103	R:CARBON FIXED CHIP(1005)	47K 1/16W J 1005 TAPE	BRFA164734G
362	R104	R:CARBON FIXED CHIP(1005)	560K 1/16W J 1005 TAPE	BRFA165644G
363	R105	R:CARBON FIXED CHIP(1005)	2.2K 1/16W J 1005 TAPE	BRFA162224G
364	R106	R:CARBON FIXED CHIP(1005)	4.7K 1/16W J 1005 TAPE	BRFA164724G

365	R107	R:CARBON FIXED CHIP(1005)	470K 1/16W J 1005 TAPE	BRFA164744G
366	R108	R:CARBON FIXED CHIP(1005)	470K 1/16W J 1005 TAPE	BRFA164744G
367	R109	R:CARBON FIXED CHIP(1005)	68K 1/16W J 1005 TAPE	BRFA166834G
368	R201	R:CARBON FIXED CHIP(1005)	10K 1/16W J 1005 TAPE	BRFA161034G
369	R202	R:CARBON FIXED CHIP(1005)	1K 1/16W J 1005 TAPE	BRFA161024G
370	R204	R:CARBON FIXED CHIP(1005)	8.2K 1/16W J 1005 TAPE	BRFA168224G
371	R206	R:CARBON FIXED CHIP(1608)	47 1/16W J TAPE	BRFC164704G
372	R207	R:CARBON FIXED CHIP(1005)	3.9K 1/16W J 1005 TAPE	BRFA163924G
373	R208	R:CARBON FIXED CHIP(1608)	10 1/10W J TAPE	BRFB011004G
374	R209	R:CARBON FIXED CHIP(1005)	470 1/16W J 1005 TAPE	BRFA164714G
375	R210	R:CARBON FIXED CHIP(1005)	2.7K 1/16W J 1005 TAPE	BRFA162724G
376	R212	R:CARBON FIXED CHIP(1005)	47K 1/16W J 1005 TAPE	BRFA164734G
377	R213	R:CARBON FIXED CHIP(1005)	2.2K 1/16W J 1005 TAPE	BRFA162224G
378	R214	R:CARBON FIXED CHIP(3216)	10K 1/8W J TAPE	BRFC181034G
379	R215	R:CARBON FIXED CHIP(1005)	5.6K 1/16W J 1005 TAPE	BRFA165624G
380	R216	R:CARBON FIXED CHIP(1608)	56 1/10W J TAPE	BRFB015604G
381	R217	R:CARBON FIXED CHIP(1005)	10 1/16W J 1005 TAPE	BRFA161004G
382	R300	R:CARBON FIXED CHIP(1608)	680 1/16W J TAPE	BRFC166814G
383	R301	R:CARBON FIXED CHIP(1005)	47K 1/16W J 1005 TAPE	BRFA164734G
384	R302	R:CARBON FIXED CHIP(1005)	82K 1/16W J 1005 TAPE	BRFA168234G
385	R303	R:CARBON FIXED CHIP(1005)	680 1/16W J 1005 TAPE	BRFA166814G
386	R304	R:CARBON FIXED CHIP(1005)	1K 1/16W J 1005 TAPE	BRFA161024G
387	R305	R:CARBON FIXED CHIP(1005)	10K 1/16W J 1005 TAPE	BRFA161034G
388	R306	R:CARBON FIXED CHIP(1005)	0 1/16W J 1005 TAPE	BRFA160004G
389	R307	R:CARBON FIXED CHIP(1005)	100 1/16W J 1005 TAPE	BRFA161014G
390	R308	R:CARBON FIXED CHIP(1005)	3.3K 1/16W J 1005 TAPE	BRFA163324G
391	R309	R:CARBON FIXED CHIP(1005)	22K 1/16W J 1005 TAPE	BRFA162234G
392	R310	R:CARBON FIXED CHIP(1005)	6.8K 1/16W J 1005 TAPE	BRFA166824G
393	R311	R:CARBON FIXED CHIP(1005)	680 1/16W J 1005 TAPE	BRFA166814G
394	R312	R:CARBON FIXED CHIP(1005)	47K 1/16W J 1005 TAPE	BRFA164734G
395	R313	R:CARBON FIXED CHIP(1005)	33K 1/16W J 1005 TAPE	BRFA163334G
396	R314	R:CARBON FIXED CHIP(1005)	1K 1/16W J 1005 TAPE	BRFA161024G
397	R315	R:CARBON FIXED CHIP(1005)	4.7K 1/16W J 1005 TAPE	BRFA164724G
398	R316	R:CARBON FIXED CHIP(1005)	1K 1/16W J 1005 TAPE	BRFA161024G
399	R317	R:CARBON FIXED CHIP(1005)	1K 1/16W J 1005 TAPE	BRFA161024G
400	R318	R:CARBON FIXED CHIP(1005)	1.5K 1/16W J 1005 TAPE	BRFA161524G
401	R319	R:CARBON FIXED CHIP(1005)	100K 1/16W J 1005 TAPE	BRFA161044G
402	R320	R:CARBON FIXED CHIP(1608)	100 1/16W J TAPE	BRFC161014G
403	R321	R:CARBON FIXED CHIP(1005)	100K 1/16W J 1005 TAPE	BRFA161044G
404	R322	R:CARBON FIXED CHIP(1005)	1K 1/16W J 1005 TAPE	BRFA161024G
405	R325	R:CARBON FIXED CHIP(1608)	0 1/16W J TAPE	BRFC160004G

406	R326	R:CARBON FIXED CHIP(1005)	4.7K 1/16W J 1005 TAPE	BRFA164724G
407	R327	R:CARBON FIXED CHIP(1005)	1.5K 1/16W J 1005 TAPE	BRFA161524G
408	R332	R:CARBON FIXED CHIP(1005)	100K 1/16W J 1005 TAPE	BRFA161044G
409	R333	R:CARBON FIXED CHIP(1005)	1.5K 1/16W J 1005 TAPE	BRFA161524G
410	R344	R:CARBON FIXED CHIP(1005)	47K 1/16W J 1005 TAPE	BRFA164734G
411	R400	R:CARBON FIXED CHIP(1005)	1K 1/16W J 1005 TAPE	BRFA161024G
412	R401	R:CARBON FIXED CHIP(1005)	2.2K 1/16W J 1005 TAPE	BRFA162224G
413	R402	R:CARBON FIXED CHIP(1005)	2.2K 1/16W J 1005 TAPE	BRFA162224G
414	R403	R:CARBON FIXED CHIP(1005)	1K 1/16W J 1005 TAPE	BRFA161024G
415	R404	R:CARBON FIXED CHIP(1005)	680 1/16W J 1005 TAPE	BRFA166814G
416	R405	R:CARBON FIXED CHIP(1005)	680 1/16W J 1005 TAPE	BRFA166814G
417	R406	R:CARBON FIXED CHIP(1005)	4.7K 1/16W J 1005 TAPE	BRFA164724G
418	R407	R:CARBON FIXED CHIP(1005)	220K 1/16W J 1005 TAPE	BRFA162244G
419	R408	R:CARBON FIXED CHIP(1005)	220K 1/16W J 1005 TAPE	BRFA162244G
420	R409	R:CARBON FIXED CHIP(1005)	220K 1/16W J 1005 TAPE	BRFA162244G
421	R410	R:CARBON FIXED CHIP(1005)	6.8K 1/16W J 1005 TAPE	BRFA166824G
422	R411	R:CARBON FIXED CHIP(1005)	150K 1/16W J 1005 TAPE	BRFA161544G
423	R412	R:CARBON FIXED CHIP(1005)	3.3M 1/16W J 1005 TAPE	BRFA163354G
424	R413	R:CARBON FIXED CHIP(1005)	2.2K 1/16W J 1005 TAPE	BRFA162224G
425	R414	R:CARBON FIXED CHIP(1005)	2.7K 1/16W J 1005 TAPE	BRFA162724G
426	R415	R:CARBON FIXED CHIP(1005)	3.9K 1/16W J 1005 TAPE	BRFA163924G
427	R416	R:CARBON AXIAL LEAD (26)	22K 1/6W J TAPE	BRPA612234G
428	R417	R:CARBON AXIAL LEAD (26)	10K 1/6W J TAPE	BRPA611034G
429	R418	R:CARBON AXIAL LEAD (26)	4.7K 1/6W J TAPE	BRPA614724G
430	R419	R:CARBON FIXED CHIP(1005)	100 1/16W J 1005 TAPE	BRFA161014G
431	R420	R:CARBON FIXED CHIP(1005)	1M 1/16W J 1005 TAPE	BRFA161054G
432	R421	R:CARBON FIXED CHIP(1005)	4.7K 1/16W J 1005 TAPE	BRFA164724G
433	R422	R:CARBON FIXED CHIP(1005)	100K 1/16W J 1005 TAPE	BRFA161044G
434	R423	R:CARBON FIXED CHIP(1005)	100K 1/16W J 1005 TAPE	BRFA161044G
435	R424	R:CARBON FIXED CHIP(1005)	100 1/16W J 1005 TAPE	BRFA161014G
436	R425	R:CARBON FIXED CHIP(1005)	100 1/16W J 1005 TAPE	BRFA161014G
437	R426	R:CARBON FIXED CHIP(1005)	2.2K 1/16W J 1005 TAPE	BRFA162224G
438	R427	R:CARBON FIXED CHIP(1005)	10K 1/16W J 1005 TAPE	BRFA161034G
439	R428	R:CARBON FIXED CHIP(1005)	100K 1/16W J 1005 TAPE	BRFA161044G
440	R429	R:CARBON FIXED CHIP(1005)	4.7K 1/16W J 1005 TAPE	BRFA164724G
441	R430	R:CARBON FIXED CHIP(1005)	10K 1/16W J 1005 TAPE	BRFA161034G
442	R431	R:CARBON FIXED CHIP(1005)	1K 1/16W J 1005 TAPE	BRFA161024G
443	R432	R:CARBON FIXED CHIP(1005)	1K 1/16W J 1005 TAPE	BRFA161024G
444	R433	R:CARBON FIXED CHIP(1005)	10K 1/16W J 1005 TAPE	BRFA161034G
445	R434	R:CARBON AXIAL LEAD (26)	22K 1/6W J TAPE	BRPA612234G
446	R435	R:CARBON FIXED CHIP(1005)	10K 1/16W J 1005 TAPE	BRFA161034G

447	R436	R:CARBON FIXED CHIP(5025)	100 1/2W J TAPE	BRFC121014G
448	R437	R:CARBON FIXED CHIP(1005)	10K 1/16W J 1005 TAPE	BRFA161034G
449	R438	R:CARBON FIXED CHIP(1005)	470 1/16W J 1005 TAPE	BRFA164714G
450	R439	R:CARBON FIXED CHIP(1005)	6.8K 1/16W J 1005 TAPE	BRFA166824G
451	R440	R:CARBON FIXED CHIP(1005)	1K 1/16W J 1005 TAPE	BRFA161024G
452	R441	R:CARBON FIXED CHIP(1005)	1.8K 1/16W J 1005 TAPE	BRFA161824G
453	R442	R:CARBON FIXED CHIP(1005)	4.7K 1/16W J 1005 TAPE	BRFA164724G
454	R443	R:CARBON FIXED CHIP(1005)	100K 1/16W J 1005 TAPE	BRFA161044G
455	R444	R:CARBON FIXED CHIP(1005)	100K 1/16W J 1005 TAPE	BRFA161044G
456	R445	R:CARBON FIXED CHIP(1005)	680 1/16W J 1005 TAPE	BRFA166814G
457	R446	R:CARBON FIXED CHIP(1005)	1K 1/16W J 1005 TAPE	BRFA161024G
458	R447	R:CARBON FIXED CHIP(1005)	100K 1/16W J 1005 TAPE	BRFA161044G
459	R448	R:CARBON FIXED CHIP(1005)	1K 1/16W J 1005 TAPE	BRFA161024G
460	R449	R:CARBON FIXED CHIP(1005)	1M 1/16W J 1005 TAPE	BRFA161054G
461	R450	R:CARBON FIXED CHIP(1005)	4.7K 1/16W J 1005 TAPE	BRFA164724G
462	R451	R:CARBON FIXED CHIP(5025)	15 1/2W J TAPE	BRFC121504G
463	R452	R:CARBON FIXED CHIP(1005)	1K 1/16W J 1005 TAPE	BRFA161024G
464	R453	R:CARBON FIXED CHIP(1005)	150K 1/16W J 1005 TAPE	BRFA161544G
465	R454	R:CARBON FIXED CHIP(1005)	100 1/16W J 1005 TAPE	BRFA161014G
466	R455	R:CARBON FIXED CHIP(1005)	4.7K 1/16W J 1005 TAPE	BRFA164724G
467	R456	R:CARBON FIXED CHIP(1005)	1.5K 1/16W J 1005 TAPE	BRFA161524G
468	R457	R:CARBON FIXED CHIP(1005)	330 1/16W J 1005 TAPE	BRFA163314G
469	R458	R:CARBON FIXED CHIP(1005)	2.2K 1/16W J 1005 TAPE	BRFA162224G
470	R459	R:CARBON FIXED CHIP(1005)	560 1/16W J 1005 TAPE	BRFA165614G
471	R460	R:CARBON FIXED CHIP(1005)	150 1/16W J 1005 TAPE	BRFA161514G
472	R461	R:CARBON FIXED CHIP(1005)	100 1/16W J 1005 TAPE	BRFA161014G
473	R462	R:CARBON FIXED CHIP(1005)	2.2K 1/16W J 1005 TAPE	BRFA162224G
474	R463	R:CARBON FIXED CHIP(1005)	47K 1/16W J 1005 TAPE	BRFA164734G
475	R464	R:CARBON FIXED CHIP(6432)	100 1W J TAPE	BRFC101014G
476	R465	R:CARBON FIXED CHIP(1005)	2.2K 1/16W J 1005 TAPE	BRFA162224G
477	R466	R:CARBON FIXED CHIP(6432)	82 1W J TAPE	BRFC108204G
478	R467	R:CARBON FIXED CHIP(1005)	4.7K 1/16W J 1005 TAPE	BRFA164724G
479	R468	R:CARBON FIXED CHIP(1005)	4.7K 1/16W J 1005 TAPE	BRFA164724G
480	R469	R:CARBON FIXED CHIP(1005)	3.3K 1/16W J 1005 TAPE	BRFA163324G
481	R470	R:CARBON FIXED CHIP(1005)	3.3K 1/16W J 1005 TAPE	BRFA163324G
482	R471	R:CARBON FIXED CHIP(1005)	220 1/16W J 1005 TAPE	BRFA162214G
483	R472	R:CARBON FIXED CHIP(1005)	220 1/16W J 1005 TAPE	BRFA162214G
484	R473	R:CARBON FIXED CHIP(1005)	22K 1/16W J 1005 TAPE	BRFA162234G
485	R474	R:CARBON FIXED CHIP(1005)	1K 1/16W J 1005 TAPE	BRFA161024G
486	R475	R:CARBON FIXED CHIP(1005)	1K 1/16W J 1005 TAPE	BRFA161024G
487	R476	R:CARBON FIXED CHIP(1005)	1K 1/16W J 1005 TAPE	BRFA161024G

488	R477	R:CARBON FIXED CHIP(1005)	220 1/16W J 1005 TAPE	BRFA162214G
489	R478	R:CARBON FIXED CHIP(1005)	1K 1/16W J 1005 TAPE	BRFA161024G
490	R479	R:CARBON FIXED CHIP(1005)	10K 1/16W J 1005 TAPE	BRFA161034G
491	R480	R:CARBON FIXED CHIP(1005)	1K 1/16W J 1005 TAPE	BRFA161024G
492	R481	R:CARBON FIXED CHIP(1005)	2.2K 1/16W J 1005 TAPE	BRFA162224G
493	R482	R:CARBON FIXED CHIP(1005)	1K 1/16W J 1005 TAPE	BRFA161024G
494	R483	R:CARBON FIXED CHIP(1005)	1K 1/16W J 1005 TAPE	BRFA161024G
495	R484	R:CARBON FIXED CHIP(1005)	10K 1/16W J 1005 TAPE	BRFA161034G
496	R485	R:CARBON FIXED CHIP(1005)	1K 1/16W J 1005 TAPE	BRFA161024G
497	R486	R:CARBON FIXED CHIP(1005)	100 1/16W J 1005 TAPE	BRFA161014G
498	R487	R:CARBON FIXED CHIP(1005)	3.3K 1/16W J 1005 TAPE	BRFA163324G
499	R488	R:CARBON FIXED CHIP(1005)	10K 1/16W J 1005 TAPE	BRFA161034G
500	R489	R:CARBON FIXED CHIP(1005)	10K 1/16W J 1005 TAPE	BRFA161034G
501	R490	R:CARBON FIXED CHIP(1005)	4.7K 1/16W J 1005 TAPE	BRFA164724G
502	R491	R:CARBON FIXED CHIP(1005)	220 1/16W J 1005 TAPE	BRFA162214G
503	R492	R:CARBON FIXED CHIP(1005)	220 1/16W J 1005 TAPE	BRFA162214G
504	R493	R:CARBON FIXED CHIP(1005)	220 1/16W J 1005 TAPE	BRFA162214G
505	R494	R:CARBON FIXED CHIP(1005)	220 1/16W J 1005 TAPE	BRFA162214G
506	R495	R:CARBON FIXED CHIP(1005)	220 1/16W J 1005 TAPE	BRFA162214G
507	R496	R:CARBON FIXED CHIP(1005)	220 1/16W J 1005 TAPE	BRFA162214G
508	R497	R:CARBON FIXED CHIP(1005)	680 1/16W J 1005 TAPE	BRFA166814G
509	R498	R:CARBON FIXED CHIP(1005)	680 1/16W J 1005 TAPE	BRFA166814G
510	R499	R:CARBON FIXED CHIP(1005)	10K 1/16W J 1005 TAPE	BRFA161034G
511	R500	R:CARBON FIXED CHIP(1005)	3.3K 1/16W J 1005 TAPE	BRFA163324G
512	R501	R:CARBON FIXED CHIP(1005)	470K 1/16W J 1005 TAPE	BRFA164744G
513	R530	R:CARBON FIXED CHIP(1005)	1.5K 1/16W J 1005 TAPE	BRFA161524G
514	R531	R:CARBON FIXED CHIP(1005)	33 1/16W J 1005 TAPE	BRFA163304G
515	R532	R:CARBON FIXED CHIP(1005)	33K 1/16W J 1005 TAPE	BRFA163334G
516	R533	R:CARBON FIXED CHIP(1005)	2.2 1/16W J 1005 TAPE	BRFA162294G
517	R534	R:CARBON FIXED CHIP(1005)	1K 1/16W J 1005 TAPE	BRFA161024G
518	R538	R:METAL OXIDE	4.7 2WS J	BRSJ024794G
519	R539	R:CARBON FIXED CHIP(1005)	10K 1/16W J 1005 TAPE	BRFA161034G
520	R543	R:CARBON FIXED CHIP(1005)	220K 1/16W J 1005 TAPE	BRFA162244G
521	R544	R:CARBON FIXED CHIP(1005)	220K 1/16W J 1005 TAPE	BRFA162244G
522	R545	R:CARBON FIXED CHIP(1005)	33K 1/16W J 1005 TAPE	BRFA163334G
523	R546	R:CARBON FIXED CHIP(1005)	56K 1/16W F TAPE	BRFA165633G
524	R547	R:CARBON FIXED CHIP(1005)	10K 1/16W F TAPE	BRFA161033G
525	R548	R:CARBON FIXED CHIP(1005)	4.7K 1/16W F TAPE	BRFA164723G
526	R549	R:CARBON FIXED CHIP(1005)	150K 1/16W J 1005 TAPE	BRFA161544G
527	RT1	R:SEMI-FIXED	RT-590 TMC3K-0B 10K-TR	BRTG0590103
528	RT2	R:SEMI-FIXED	RT-590 TMC3K-0B 1K-TR	BRTG0590102

529	RT301	R:SEMI-FIXED	RT-590 TMC3K-0B 4.7K-TR	BRTG0590472
530	RT302	R:SEMI-FIXED	RT-590 TMC3K-0B 4.7K-TR	BRTG0590472
531	RT303	R:SEMI-FIXED	RT-590 TMC3K-0B 4.7K-TR	BRTG0590472
532	RT401	R:SEMI-FIXED	RT-590 TMC3K-0B 10K-TR	BRTG0590103
533	RT402	R:SEMI-FIXED	RT-590 TMC3K-0B 4.7K-TR	BRTG0590472
534	RT403	R:SEMI-FIXED	RT-590 TMC3K-0B 47K-TR	BRTG0590473
535	T401	TRANS	TF-577	BTFG0577001
536	TP201	TEST PIN	TP-138 IPS-1820-01-PT	BTPG0138001
537	W401	WIRE W-004	UL 1571 #26 3- 35- 3 WHT	CUPJ003511G
538	W502	WIRE	UL 1007 #24 3-130- 3 WHT	CUAJ013011G
539	W503	WIRE	UL 1007 #24 3-130- 3 GRY	CUAH013011G
540	X301	CRYSTAL	QX-974 10.240000MHZ	BQXG0974001
541	B551	PCB:FRONT	PA-0504AA2/4	BPAG0504AA2
542	C551	C:CERAMIC M/L (1005) TAPE	0.01uF 25V K B	BCNB511035G
543	C552	C:CERAMIC M/L (1005) TAPE	0.01uF 25V K B	BCNB511035G
544	C553	C:CERAMIC M/L (1005) TAPE	0.01uF 25V K B	BCNB511035G
545	C554	C:CERAMIC M/L (1005) TAPE	0.01uF 25V K B	BCNB511035G
546	C555	C:CERAMIC M/L (1005) TAPE	0.01uF 25V K B	BCNB511035G
547	D551	DIODE:LED	DA-1261 BD2-40TYG-A12U	BDAG1261001
548	J551	JACK:	JK-1398 IMSA-9632S-35Y913	BJKG1398035
549	L551	LZ:INDUCTOR:MOLDED CHIP	LZ-381 UPZ1608E221-2R0TF	BLZG0381001
550	L552	LZ:INDUCTOR:MOLDED CHIP	LZ-381 UPZ1608E221-2R0TF	BLZG0381001
551	L553	LZ:INDUCTOR:MOLDED CHIP	LZ-381 UPZ1608E221-2R0TF	BLZG0381001
552	L554	LZ:INDUCTOR:MOLDED CHIP	LZ-381 UPZ1608E221-2R0TF	BLZG0381001
553	L555	LZ:INDUCTOR:MOLDED CHIP	LZ-381 UPZ1608E221-2R0TF	BLZG0381001
554	R551	R:CARBON FIXED CHIP(1005)	10K 1/16W J 1005 TAPE	BRFA161034G
555	R552	R:CARBON FIXED CHIP(1005)	10K 1/16W J 1005 TAPE	BRFA161034G
556	R553	R:CARBON FIXED CHIP(1005)	10K 1/16W J 1005 TAPE	BRFA161034G
557	R554	R:CARBON FIXED CHIP(1005)	4.7K 1/16W J 1005 TAPE	BRFA164724G
558	R555	R:CARBON FIXED CHIP(1005)	2.2K 1/16W J 1005 TAPE	BRFA162224G
559	S551	SWITCH:SLIDE	SW-949 SS-22F07-R14	BSWG0949001
560	S552	SWITCH:SLIDE	SW-949 SS-22F07-R14	BSWG0949001
561	S553	SWITCH:SLIDE	SW-949 SS-22F07-R14	BSWG0949001
562	B701	PCB:CH SW	PA-0504AA 3/4	BPAG0504AA3
563	C701	C:CERAMIC M/L (1005) TAPE	0.01uF 25V K B	BCNB511035G
564	C702	C:CERAMIC M/L (1005) TAPE	0.01uF 25V K B	BCNB511035G
565	R701	R:CARBON FIXED CHIP(1005)	1K 1/16W J 1005 TAPE	BRFA161024G
566	R702	R:CARBON FIXED CHIP(1005)	1K 1/16W J 1005 TAPE	BRFA161024G
567	S701	SWITCH:ROTARY	SR-458 SR10030F-30F-F7-008	BSRG0458001
568	W701	W:WIRE:ASSEMBLED	W-072545Z	CZDZ072545G
569	B801	PCB:VOL	PA-0504AA 4/4	BPAG0504AA4

570	VR801	R:VARIABLE(TP96N00N 25F A503)	RV-903 RY-6467-1 50KA/S	BRVG0903001
571	W801	WIRE:ASSEMBLED	W-072556Z	CZDZ072556G
572	FC501	FLAT CABLE	WF-402 3- 54- 3 35PIN	BWFG4020549
573	J501	JACK:ANT W/O ACC	JK-1639 M-RM-L 102	BJKG1639003
574	J502	JACK	JK-1486 CONNECTOR-RF6	BJKG1486001
575	Q502	FIELD EFFECT TRANSISTOR	DC-361 IRF520PBF	BDCN0361001
576	SP501	SPEAKER	SP-474 YD77A-64F8	BSPG0474001
577	VR501	R:VARIABLE	RV-970 5KB	BRVG0970001
578	VR502	R:VARIABLE	RV-970 5KB	BRVG0970001
579	WA501	CORD:DC CORD	WZ-1105 1500 W/P	BWZY1105001
580	Y501	INSULATION SHEET	YY-1659 WCP23-16-9.4-2.0	BYYG1659001
581	MC951	MICROPHONE	MK-656 IP743-H010605	BMKG0656001